PROPOSED STORM DRAINAGE STRUCTURES						
NUMBER	NORTHING	EASTING	STRUCTURE TYPE	RIM ELEV	FLOW LINE ELEV	DRAINAGE AREA, AC
A01	319406.60	814363.97	6–72 CURB INLET	252.79	248.00	
A02	319430.81	814318.08	DMH	253.48	247.48	
A03	319435.51	814233.90	DMH	250.68	245.90	
A04	319464.38	814215.68	TYPE 'D' HEADWALL	244.99	245.00	
B01	319239.80	814148.22	NO. 10 INLET	244.25	242.00	
B02	319232.54	814086.05	NO. 10 INLET	244.25	241.70	
B03	319143.40	814012.69	3' X 3' INLET	243.80	241.31	
B04	319022.24	813903.20	EXISTING INLET	243.69	240.90	
C01	319426.44	813950.39	TYPE 'D' HEADWALL	245.20	245.20	
C02	319499.62	813881.74	TYPE 'D' HEADWALL	244.80	244.80	

PROPOSED STORM DRAIN PIPES										
NAME	FROM	INV. ELEV	TO	INV. ELEV	DIA., in	SLOPE, %	LENGTH, ft	DESIGN Q, cfs	CAPACITY Q, cfs	VELOCITY, fps
A01–A02	A01	248.00	A02	247.48	15"	1.00%	51.88	6.32	6.47	4.89
A02–A03	A02	247.48	A03	246.00	15"	1.76%	84.31	6.32	8.36	4.89
A03–A04	A03	245.90	A04	245.00	15"	2.64%	34.13	6.32	10.51	4.89
B01–B02	B01	242.00	B02	241.75	15"	0.40%	62.59	3.80	4.09	3.10
B02–B03	B02	241.70	B03	241.36	18"	0.30%	115.45	4.85	5.75	2.74
B03–B04	B03	241.31	B04	240.90	18"	0.25%	163.29	5.20	5.25	2.94
C01–C02	C01	245.20	C02	244.80	18"	0.40%	100.34	6.50	6.64	3.68

NOTES:

1. COORDINATES FOR GRATE INLETS ARE TO CENTER OF GRATE, CENTER OF INLET.
2. COORDINATES FOR DRAIN MANHOLES ARE TO THE CENTER OF THE MANHOLE.
3. COORDINATES FOR HEADWALLS ARE TO THE CENTER OF THE FACE OF HEADWALL.
4. COORDINATES FOR 6–72 CURB INLETS ARE TO THE FACE OF CURB AT CENTER OF INLET.
5. RIM ELEVATIONS SHOWN FOR GRATE INLETS ARE TO THE TOP CENTER OF THE GRATE.
6. RIM ELEVATIONS SHOWN FOR DRAIN MANHOLES ARE TO THE TOP CENTER OF THE LID.
7. RIM ELEVATIONS SHOWN FOR THE 6–72 CURB INLETS ARE TO THE BOTTOM OF CURB AT THE INLET. ACTUAL THROAT ELEVATION OF INLET IS 3" LOWER THAN BOTTOM OF CURB.

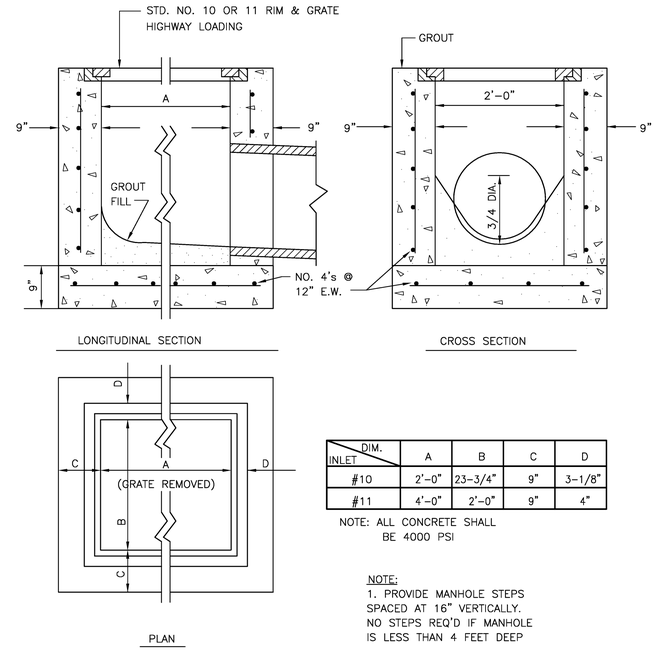

DIM. / INLET	A	B	C	D
#10	2'–0"	23–3/4"	9"	3–1/8"
#11	4'–0"	2'–0"	9"	4"

NOTE: ALL CONCRETE SHALL BE 4000 PSI

NOTE:
1. PROVIDE MANHOLE STEPS SPACED AT 16" VERTICALLY. NO STEPS REQ'D IF MANHOLE IS LESS THAN 4 FEET DEEP

1 C2.04 TYP. NO. 10 & NO. 11 GRATE INLET
NTS

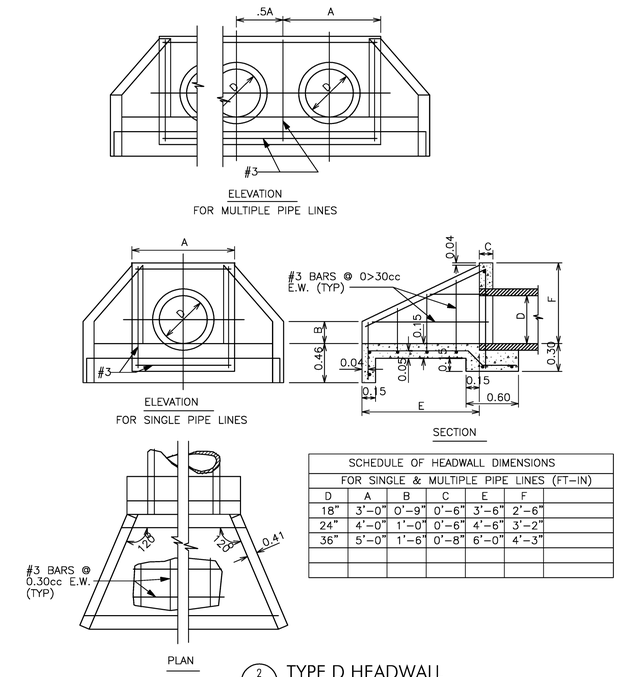

SCHEDULE OF HEADWALL DIMENSIONS FOR SINGLE & MULTIPLE PIPE LINES (FT–IN)					
D	A	B	C	E	F
18"	3'–0"	0'–9"	0'–6"	3'–6"	2'–6"
24"	4'–0"	1'–0"	0'–6"	4'–6"	3'–2"
36"	5'–0"	1'–6"	0'–8"	6'–0"	4'–3"

2 C2.04 TYPE D HEADWALL
NTS

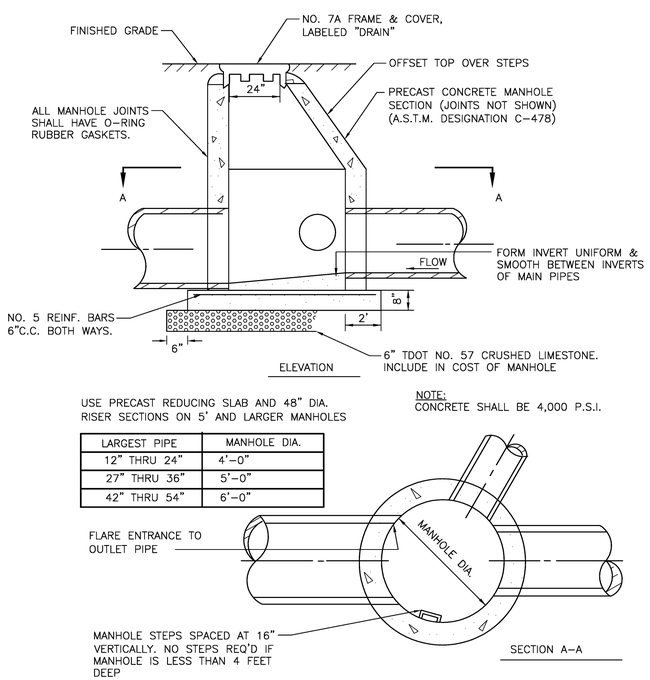

LARGEST PIPE	MANHOLE DIA.
12" THRU 24"	4'–0"
27" THRU 36"	5'–0"
42" THRU 54"	6'–0"

3 C2.04 TYP. STORM DRAINAGE MANHOLE
NTS

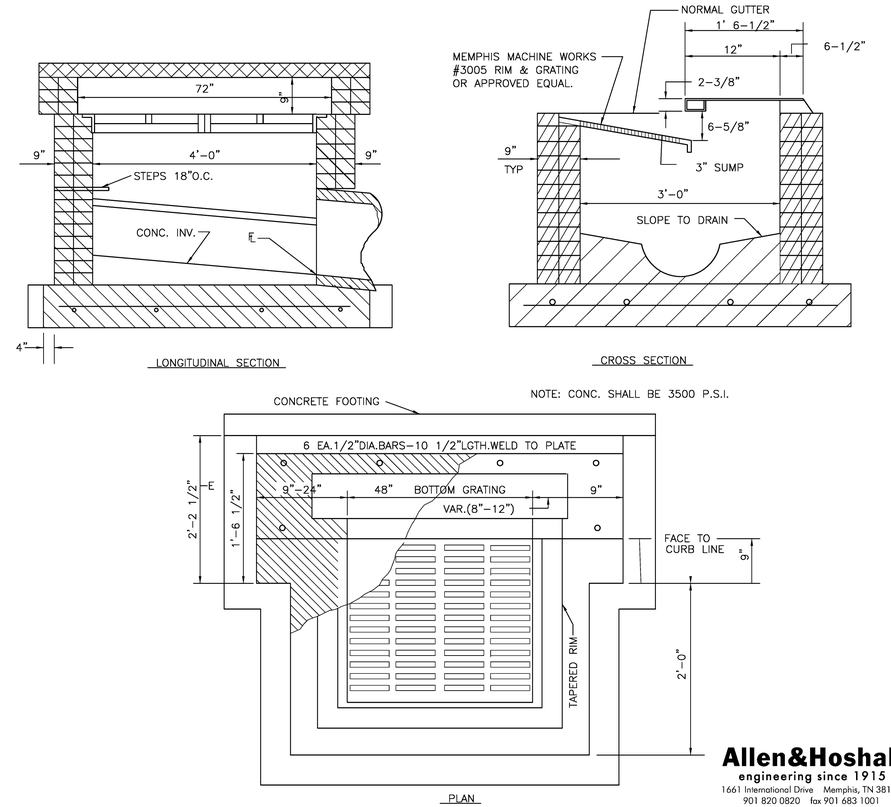

4 C2.04 6-72 CURB INLET
NTS

Allen&Hoshall
engineering since 1915
1661 International Drive Memphis, TN 38120
901 820 0820 fax 901 683 1001
www.allenhoshall.com

CLARK/DIXON ARCHITECTS
2035 MADISON AVENUE | MEMPHIS, TN 38104
clarkdixonarchitects.com

SHELBY COUNTY SHERIFF'S OFFICE
RANGE OPERATIONS BUILDING
800 DOVECREST
MEMPHIS, TENNESSEE

REVISIONS:

DATE: AUGUST 28, 2012
DRAWN BY: RDL
SHEET TITLE: STORM DRAINAGE DATA & DETAILS
SHEET NO: C2.04