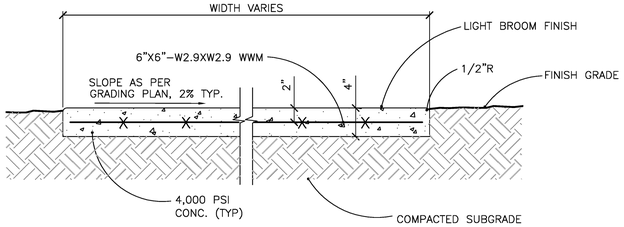

NOTE:
*SEE DETAIL 2 THIS SHEET FOR EXPANSION & CONTROL JOINT DETAILS.
*SEE DETAIL 5 THIS SHEET FOR SIDEWALK BEHIND CURB.

1 C5.01 TYP. CONCRETE SIDEWALK
NTS

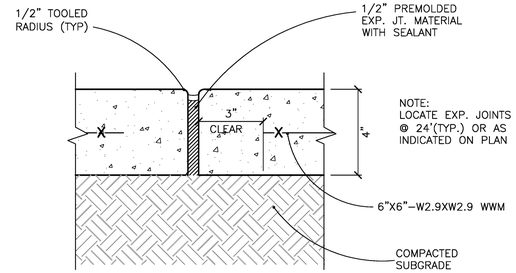

EXPANSION JOINT

NOTE:
LOCATE EXP. JOINTS
@ 24'(TYP.) OR AS
INDICATED ON PLAN

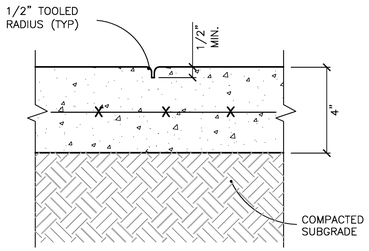

CONTROL JOINT

NOTE:
LOCATE CONTROL JOINTS @ A
DISTANCE EQUAL TO WIDTH OF
WALK (6' MAX SPACING), OR AS
INDICATED ON PLAN.

2 C5.01 TYP. SIDEWALK JOINTS
NTS

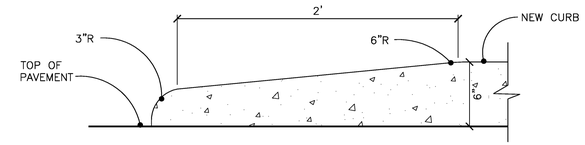

3 C5.01 TYP. CURB WIPEDOWN
NTS

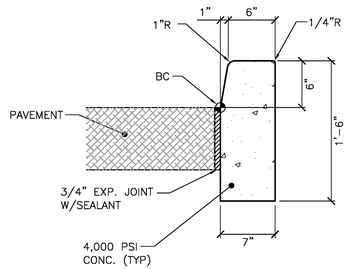

4 C5.01 TYP. VERTICAL CURB
NTS

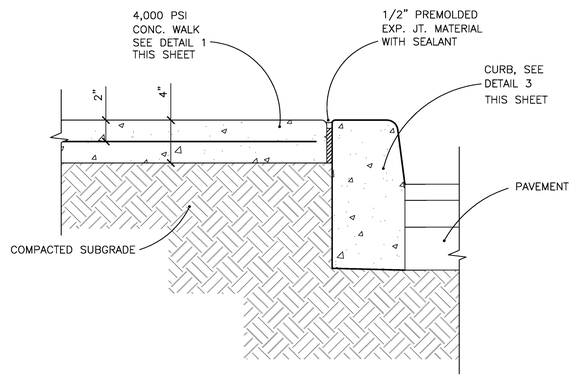

5 C5.01 TYP. SIDEWALK BEHIND CURB
NTS

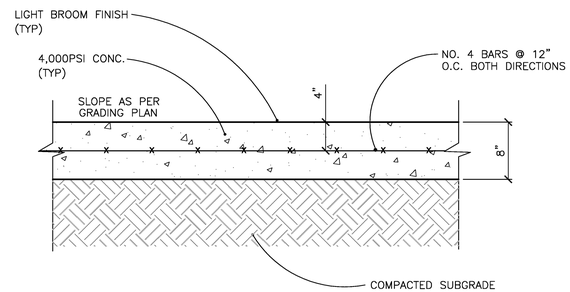

6 C5.01 HEAVY DUTY CONCRETE PAD
NTS

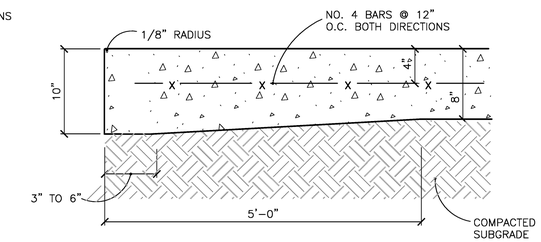

7 C5.01 TYP. THICKENED EDGE JOINT
NTS

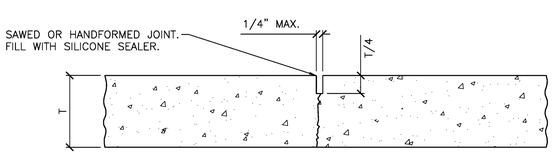

8 C5.01 CONTROL JOINT
NTS

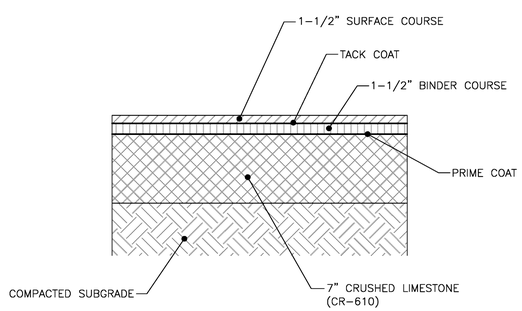

9 C5.01 ASPHALT PAVEMENT
NTS

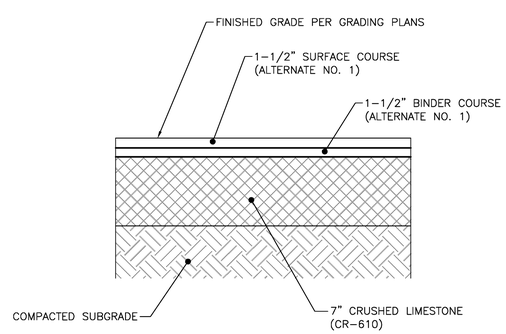

10 C5.01 GRAVEL PARKING AREA
NTS

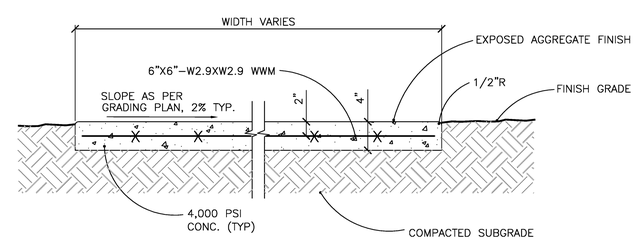

NOTE:
*SEE DETAIL 2 THIS SHEET FOR EXPANSION & CONTROL JOINT DETAILS.
*SEE DETAIL 5 THIS SHEET FOR SIDEWALK BEHIND CURB.

11 C5.01 TYP. CONCRETE SIDEWALK
NTS

Allen&Hoshall
engineering since 1915
1661 International Drive Memphis, TN 38120
901 820 0820 fax 901 683 1001
www.allenhoshall.com

CLARK/DIXON
ARCHITECTS
2035 MADISON AVENUE | MEMPHIS, TN 38104
clarkandpartners.com

SHELBY COUNTY SHERIFF'S OFFICE
RANGE OPERATIONS BUILDING
800 DOVECREST
MEMPHIS, TENNESSEE

REVISIONS:

DATE:
AUGUST 28, 2012

DRAWN BY:
RDL

SHEET TITLE:
SITE DETAILS

SHEET NO:
C5.01