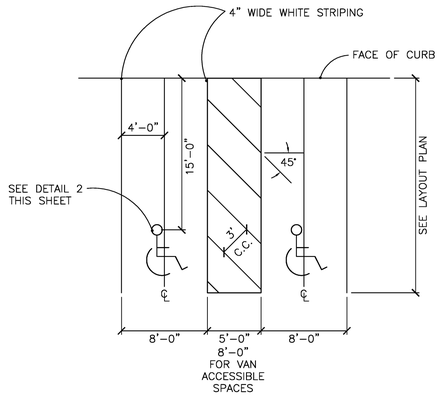

1 C5.02 TYP. ACCESSIBLE PARKING SPACE
NTS

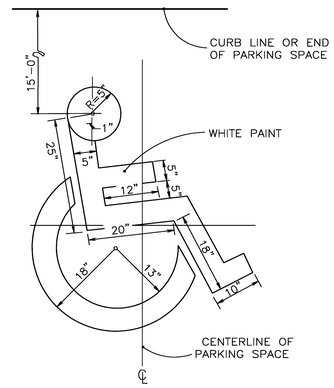

2 C5.02 TYP. ACCESSIBLE PARKING SYMBOL
NTS

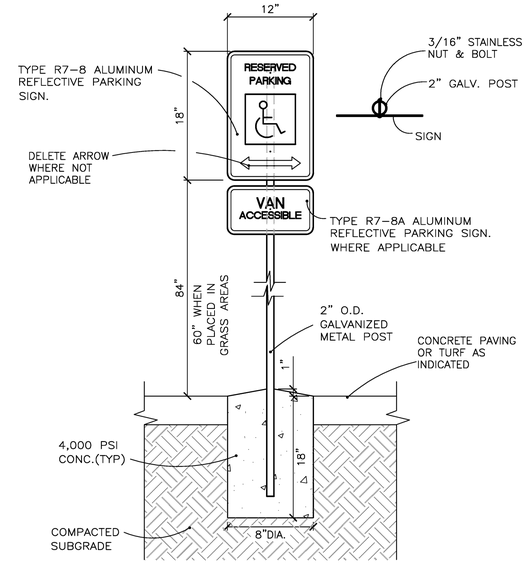

3 C5.02 TYP. ACCESSIBLE PARKING SIGN
NTS

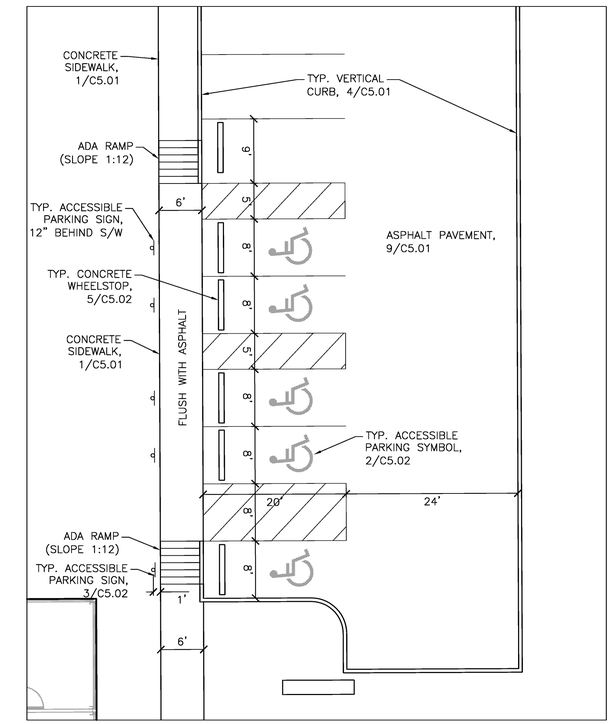

4 C5.02 HANDICAPPED PARKING ENLARGEMENT
SCALE: 1" = 10'

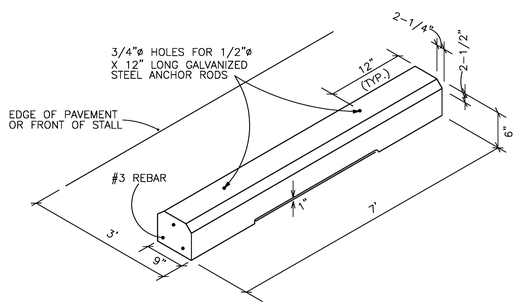

5 C5.02 TYP. CONCRETE WHEELSTOP
NTS

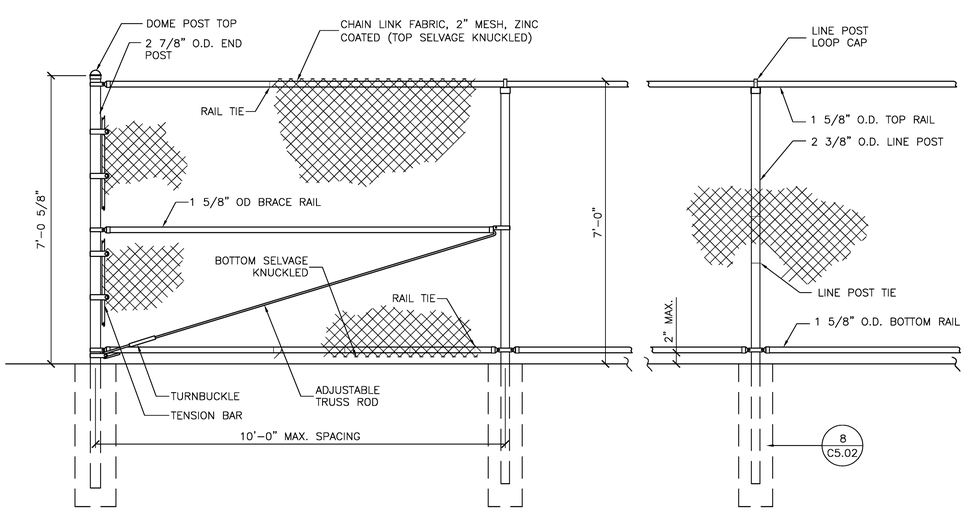

6 C5.02 TYP. CHAIN LINK FENCE
NTS

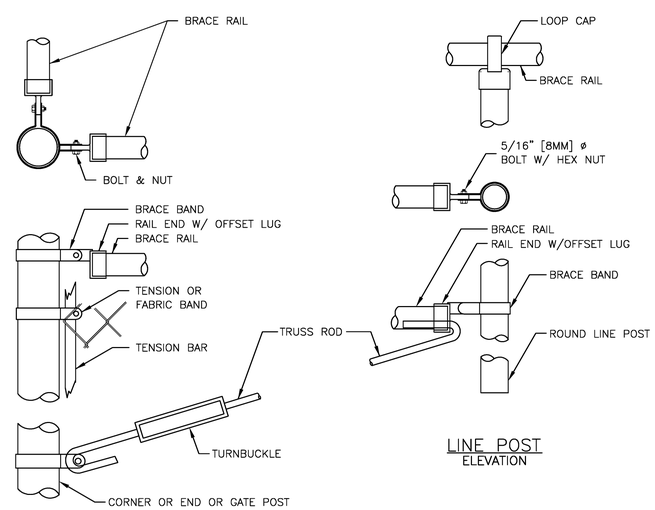

END, CORNER, OR GATE POST
ELEVATION

LINE POST
ELEVATION

7 C5.02 TYP. CHAIN LINK FENCE DETAILS
NTS

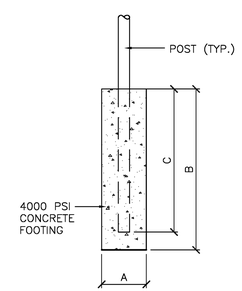

FABRIC HEIGHT	POST TYPE	DIAM A	DEPTH B	DEPTH C
7'-0"	LINE	10"	36"	33"
7'-0"	TERMINAL	12"	38"	35"
7'-0"	GATE	18"	48"	45"

8 C5.02 TYP. FENCE POST FOOTINGS
NTS

Allen&Hoshall
engineering since 1915
1661 International Drive Memphis, TN 38120
901 820 0820 fax 901 683 1001
www.allenhoshall.com

CLARK/DIXON ARCHITECTS
2035 MADISON AVENUE | MEMPHIS, TN 38104
clark@dixonarchitects.com

SHELBY COUNTY SHERIFF'S OFFICE
RANGE OPERATIONS BUILDING
800 DOVECREST MEMPHIS, TENNESSEE

REVISIONS:

DATE: AUGUST 28, 2012

DRAWN BY: RDL

SHEET TITLE: SITE DETAILS

SHEET NO: **C5.02**