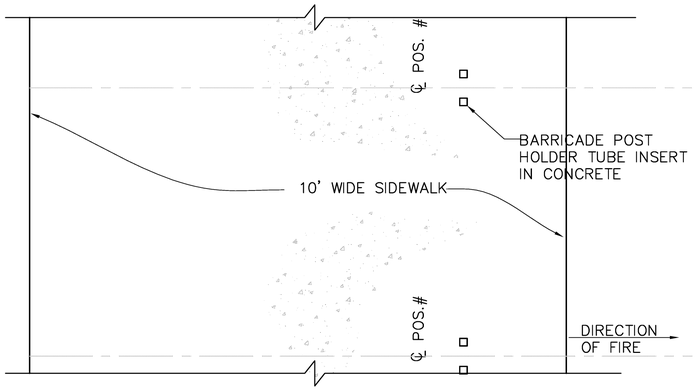

PLAN

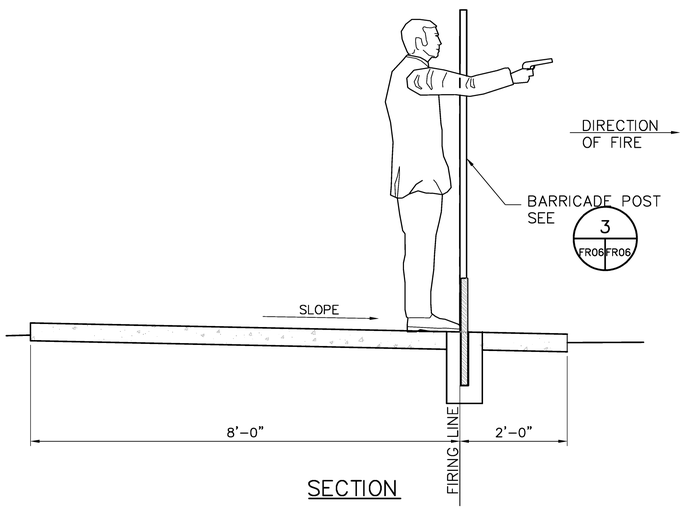

SECTION

DETAIL 1 FR05 FR06
SCALE: 3/4"=1'-0"

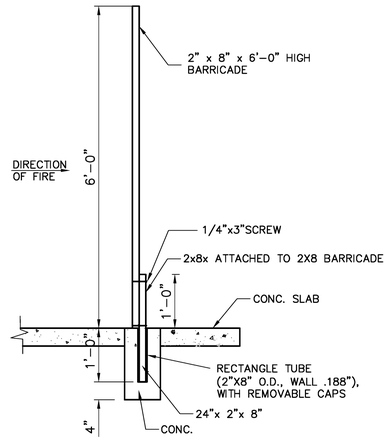

BARRICADE POST DETAIL 3 FR06 FR06
SCALE: 3/4"=1'-0"

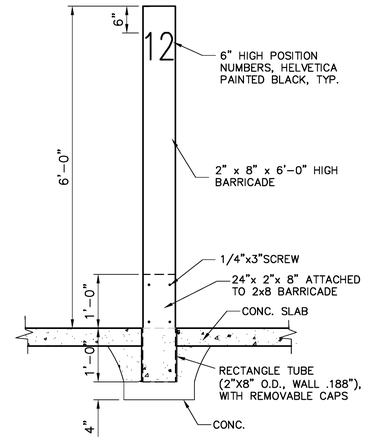

NOTE:
PROVIDE (50) BARRICADES FOR INSERT LOCATIONS AT 50YD FL, 25YD FL,

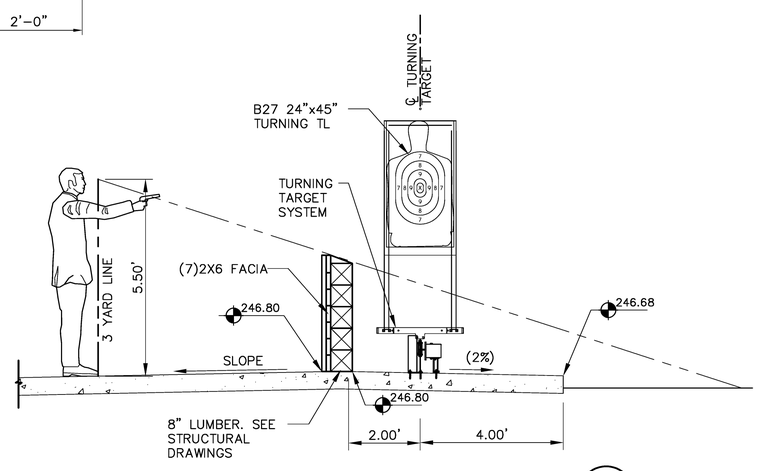

TURNING TARGETS SECTION 2 FR05 FR06
SCALE: 1:2

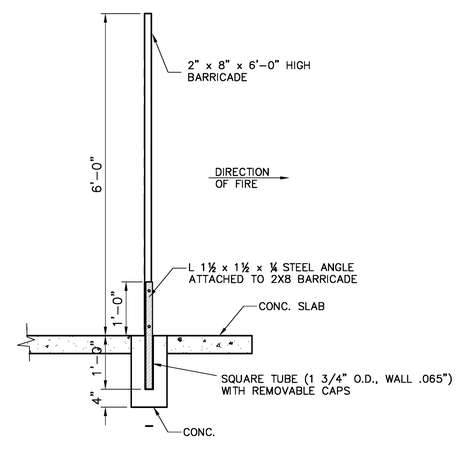

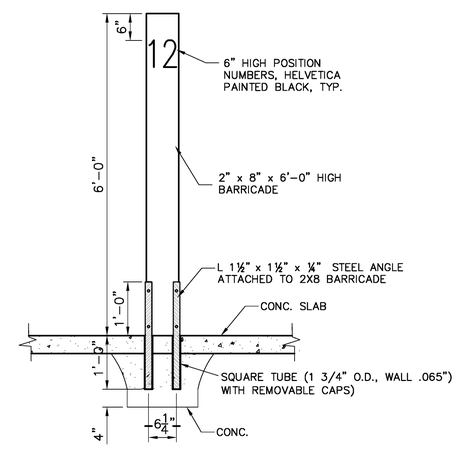

ALTERNATE
BARRICADE POST DETAIL 4 FR06 FR06
SCALE: 3/4"=1'-0"

GRAPHIC SCALE
3/4" 0 3/4" 3/2"
(IN FEET)
1 inch = 3/4"ft.

CLARK/DIXON ARCHITECTS
2035 MADISON AVENUE / MEMPHIS, TN 38104
clarkdixonarchitects.com

SHELBY COUNTY SHERIFF'S OFFICE
RANGE OPERATIONS BUILDING
800 DOVECREST
MEMPHIS, TENNESSEE

SEAL

REVISIONS:

DATE:
AUGUST 24, 2012

DRAWN BY:
DM

SHEET TITLE:
DETAILS

SHEET NO:
FR06