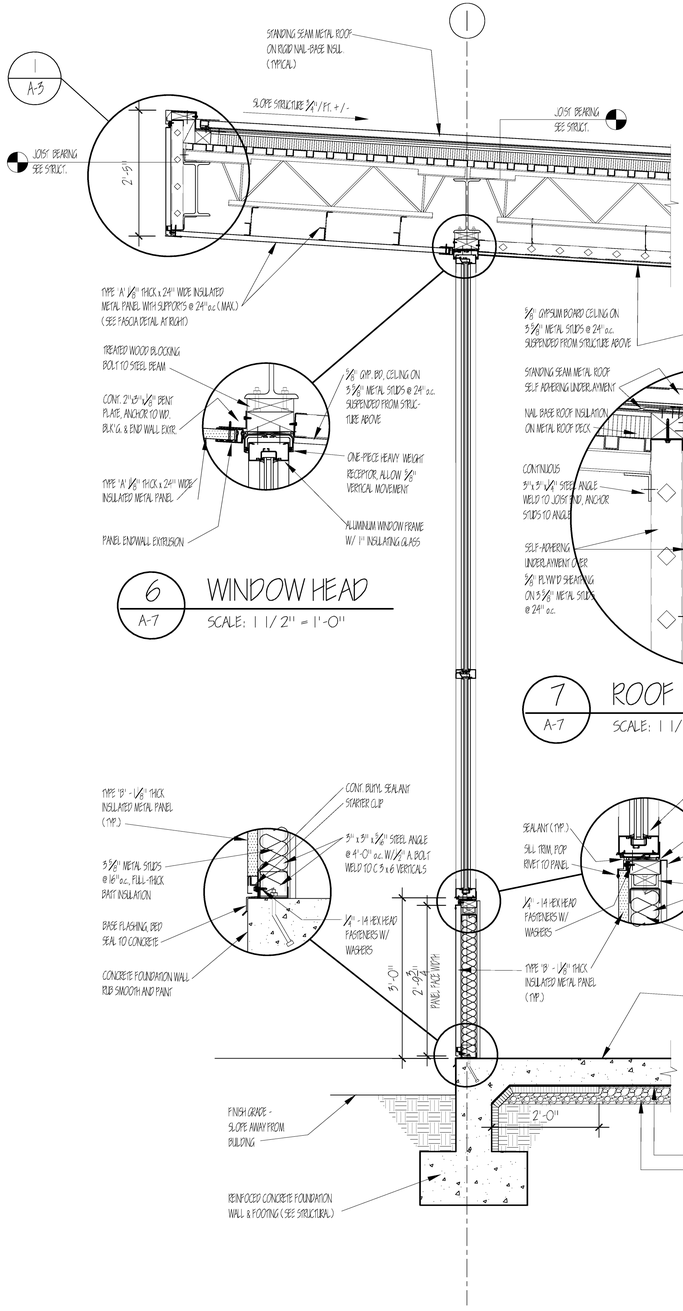


6 A-7 WINDOW HEAD
SCALE: 1 1/2" = 1'-0"

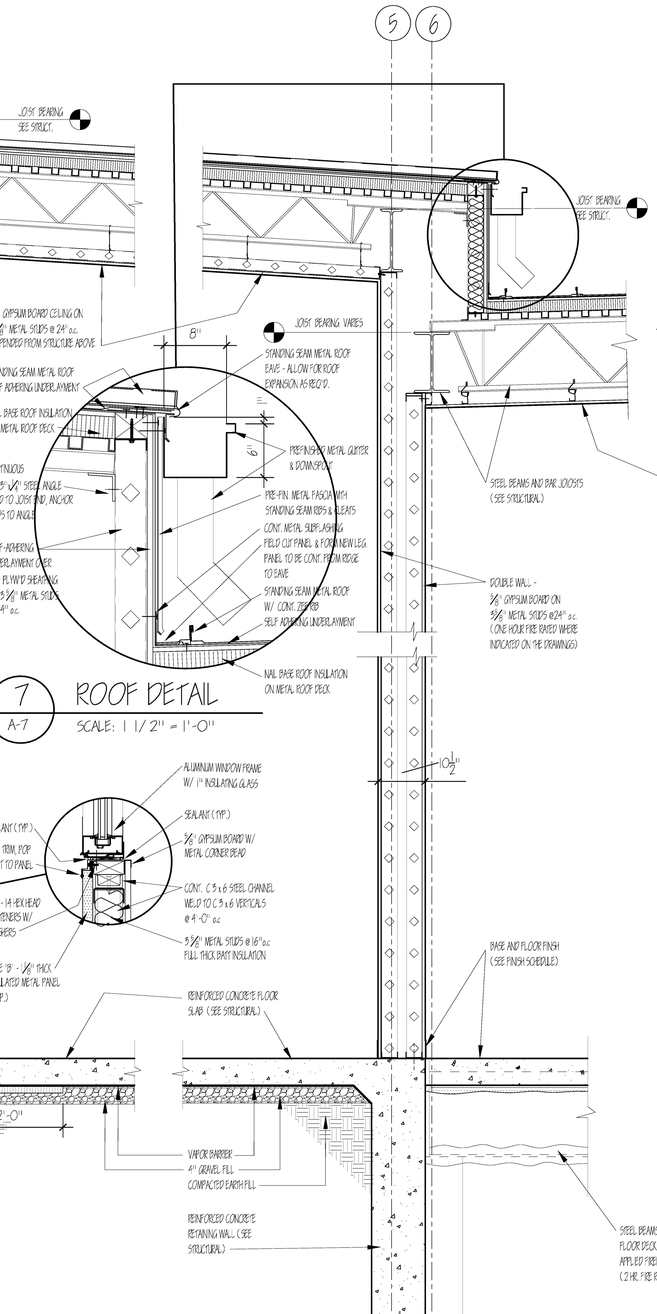


7 A-7 ROOF DETAIL
SCALE: 1 1/2" = 1'-0"

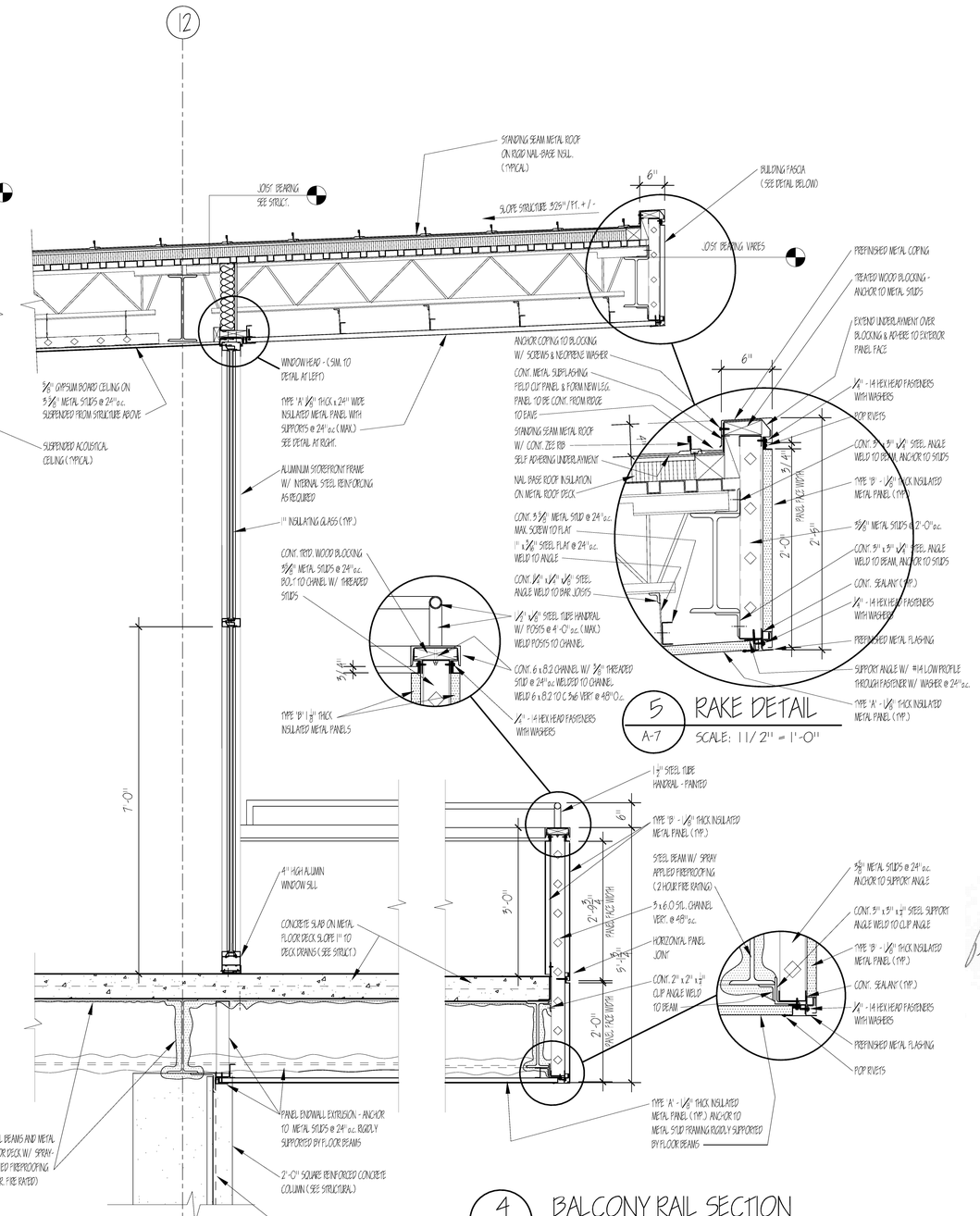


5 A-7 RAKE DETAIL
SCALE: 1 1/2" = 1'-0"




4 A-7 BALCONY RAIL SECTION
SCALE: 3/4" = 1'-0"




1 A-7 WALL SECTION
SCALE: 3/4" = 1'-0"




2 A-7 WALL SECTION
SCALE: 3/4" = 1'-0"

3 A-7 WALL SECTION
SCALE: 3/4" = 1'-0"


CLARK/DIXON ARCHITECTS
2035 MADISON AVENUE / MEMPHIS, TN 38104
CLARKDIXONARCHITECTS.COM


SHELBY COUNTY SHERIFF'S OFFICE
# RANGE OPERATIONS BUILDING
800 DOVECREST
MEMPHIS, TENNESSEE

SEAL
RICHARD LARRY CLARK
REGISTERED ARCHITECT
ARCHITECTURE
No. 101032
STATE OF TENNESSEE

REVISIONS:

DATE: AUGUST 28, 2012

DRAWN BY: RLC

SHEET TITLE: WALL SECTIONS

SHEET NO: A-7