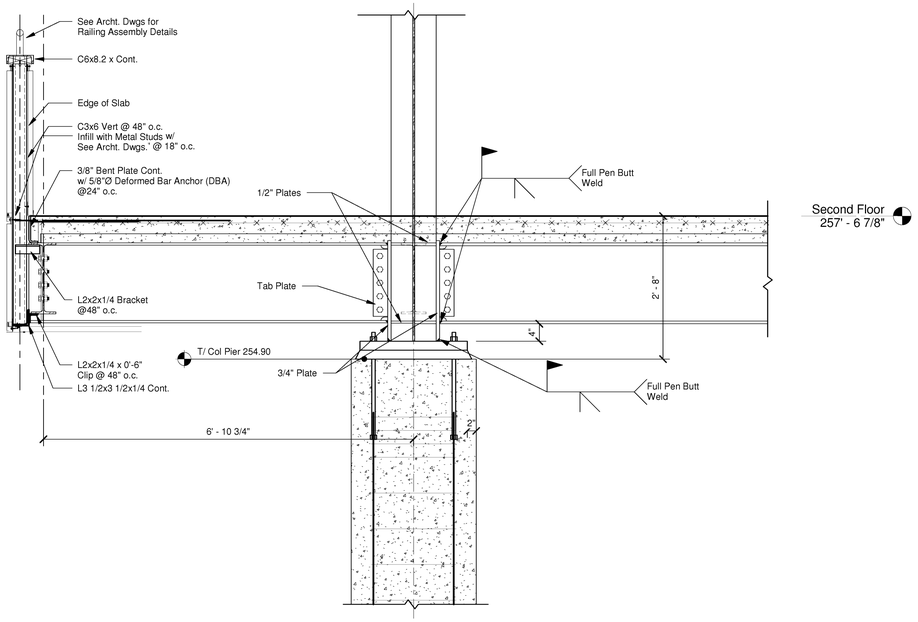

1 Section @ Cantilevered Balcony Beam
3/4" = 1'-0"

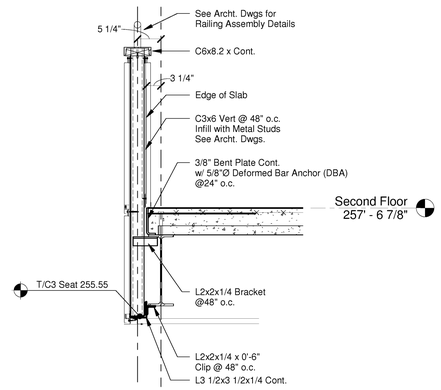

2 Section
3/4" = 1'-0"

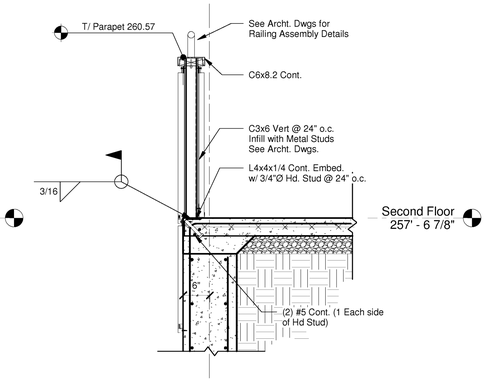

3 Section
3/4" = 1'-0"

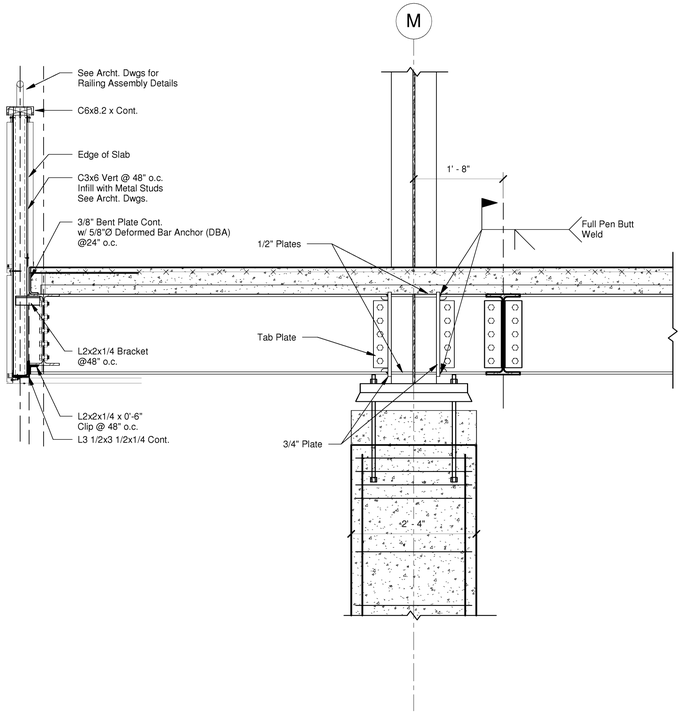

4 Section
3/4" = 1'-0"

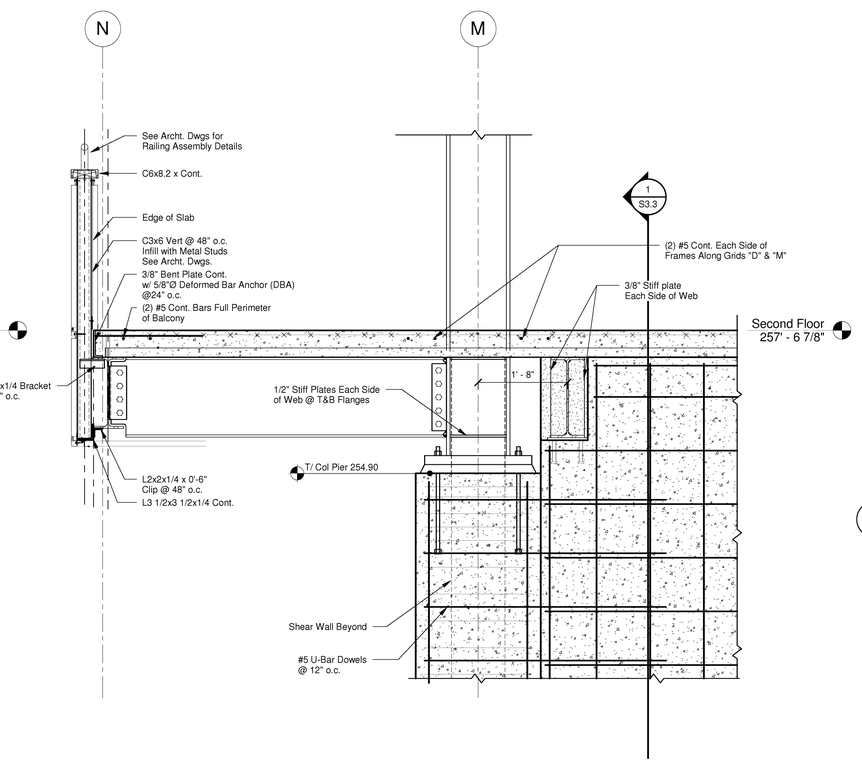

5 Section
3/4" = 1'-0"

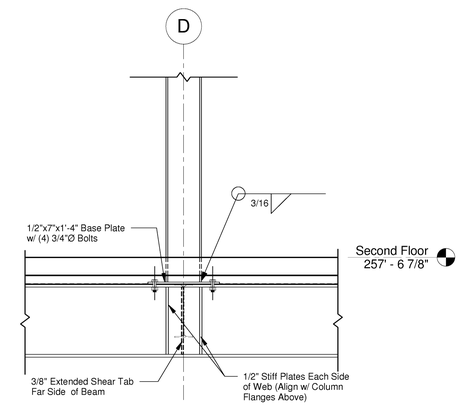

6 Section
3/4" = 1'-0"

N

Allen&Hoshall
engineering since 1915
A&H Job No: 61902

CLARK/DIXON
ARCHITECTS
2035 MADISON AVENUE / MEMPHIS, TN 38104
901.725.0054 FAX 901.725.0057

SHELBY COUNTY SHERIFF'S OFFICE
RANGE OPERATIONS BUILDING
800 DOVECREST
MEMPHIS, TENNESSEE

SEAL:
EDWARD WILLIAM SEAGRAVES
STATE OF TENNESSEE
8-28-12

REVISIONS:

DATE:
Aug 28, 2012

DRAWN BY:
Author

SHEET TITLE:
Floor Sections

SHEET NO:
S3.2

8/28/2012 2:38:08 PM