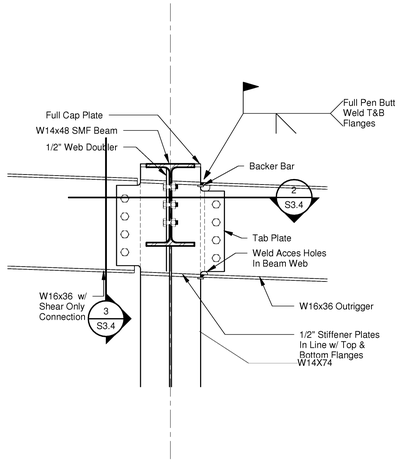

1 Section
1" = 1'-0"

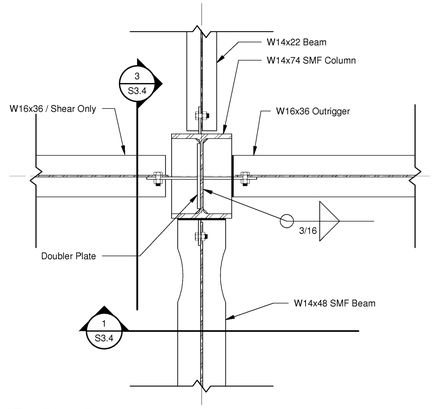

2 Plan Detail
1" = 1'-0"

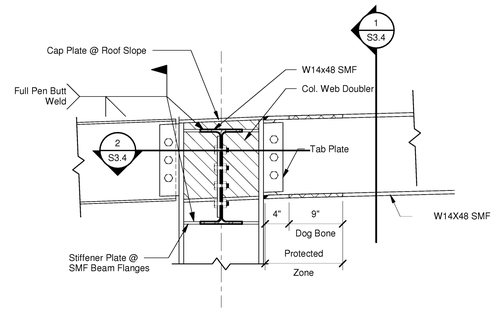

3 Section
1" = 1'-0"

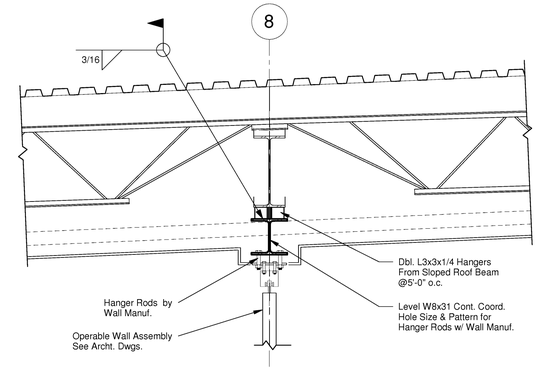

4 Section @ Operable Wall
3/4" = 1'-0"

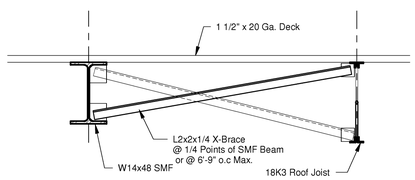

5 SMF Beam Parallel to Joists
3/4" = 1'-0"

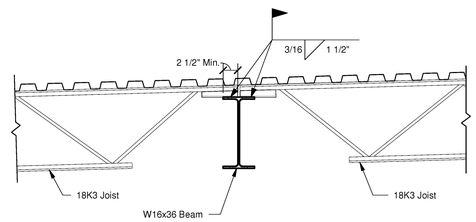

6 Typical Joist Bearing @ 7, 8, 9 &10
3/4" = 1'-0"

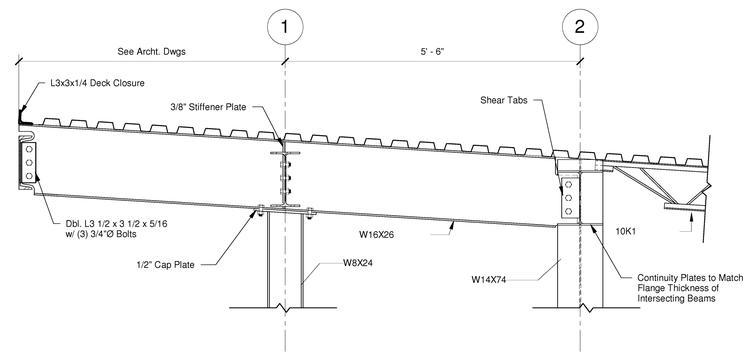

7 Section @ Cantilever Roof
3/4" = 1'-0"

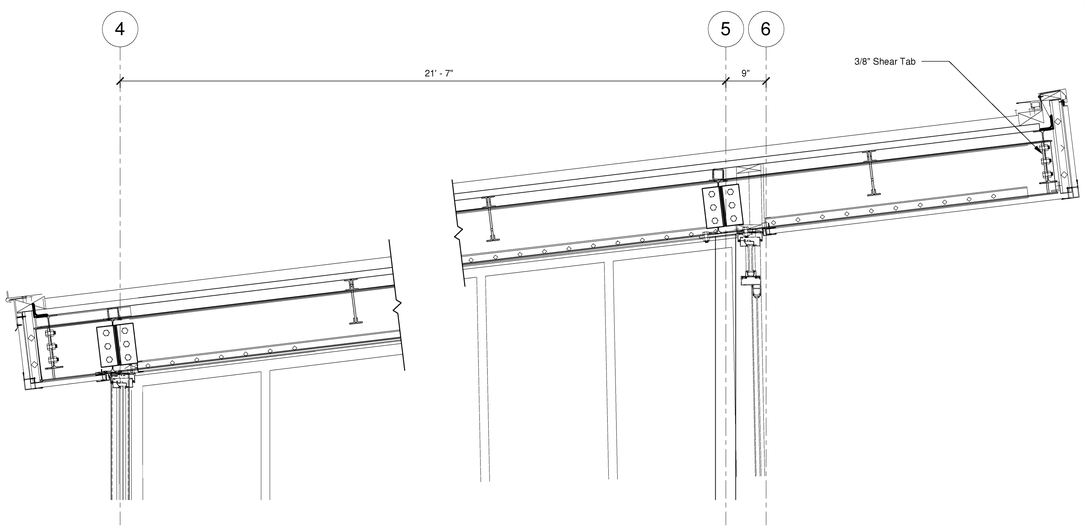

8 Section @ Lantern Roof
3/4" = 1'-0"

N

CLARK/DIXON ARCHITECTS
2035 MADISON AVENUE / MEMPHIS, TN 38104
clarkdixonarchitects.com

SHELBY COUNTY SHERIFF'S OFFICE
RANGE OPERATIONS BUILDING
800 DOVECREST MEMPHIS, TENNESSEE

SEAL:
E. Clark Dixon
8-28-12
EARTH SEAGRAVE
STATE OF TENNESSEE

REVISIONS:

DATE:
Aug 28, 2012

DRAWN BY:
Author

SHEET TITLE:
Roof Sections

SHEET NO:
S3.4

Allen&Hoshall
engineering since 1915
A&H Job No: 61902

8/28/2012 1:38:13 PM