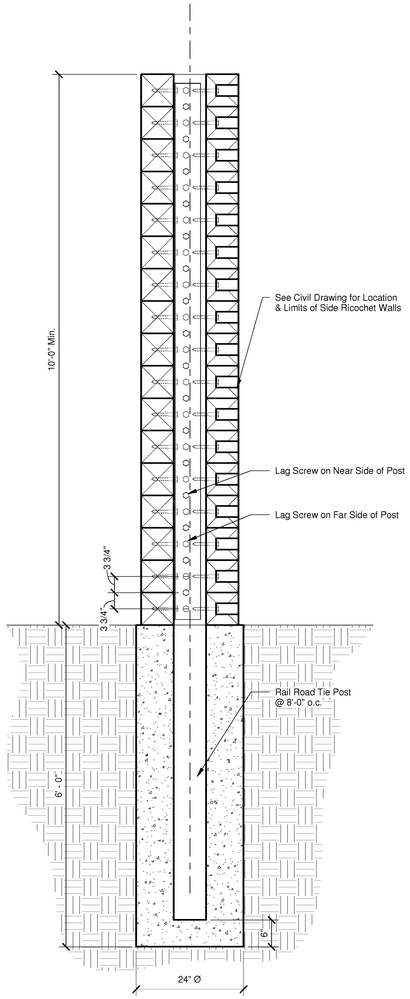

1 Secton Thru Ricochet Wall @ Firing Range
3/4" = 1'-0"

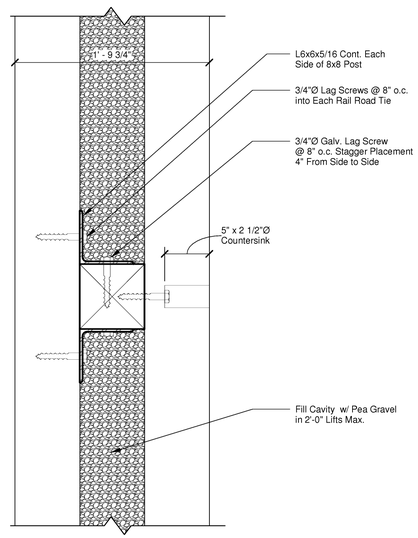

2 Plan View of Ricochet Wall
1 1/2" = 1'-0"

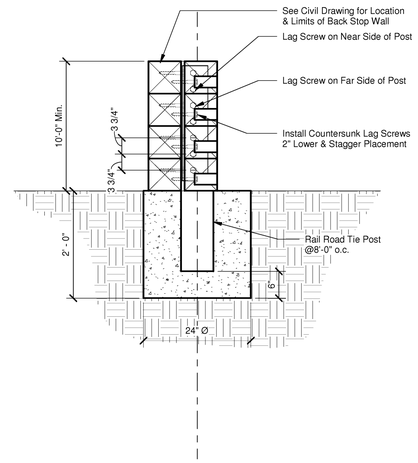

3 Secton Thru Back Stop Wall @ Firing Range
3/4" = 1'-0"

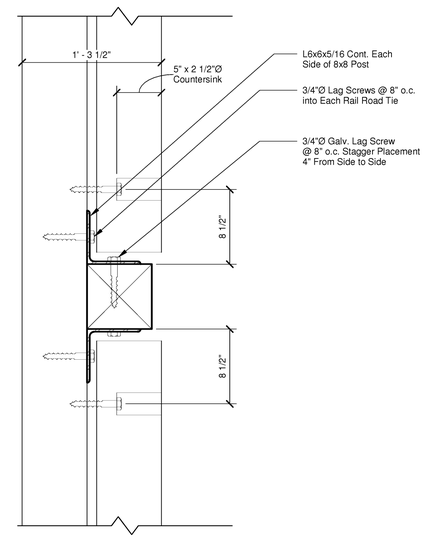

4 Plan View of Back Stop Wall
1 1/2" = 1'-0"

N

CLARK/DIXON ARCHITECTS
2035 MADISON AVENUE / MEMPHIS, TN 38104
clarkdixonarchitects.com

SHELBY COUNTY SHERIFF'S OFFICE
RANGE OPERATIONS BUILDING
800 DOVECREST MEMPHIS, TENNESSEE

SEAL
KEITH SEAGRAVE
STATE OF TENNESSEE
8-28-12

REVISIONS:

DATE:
Aug 28, 2012

DRAWN BY:
Author

SHEET TITLE:
Firing Range Walls

SHEET NO:
S4.1

Allen&Hoshall
engineering since 1915
A&H Job No: 61902

8/28/2012 1:38:16 PM