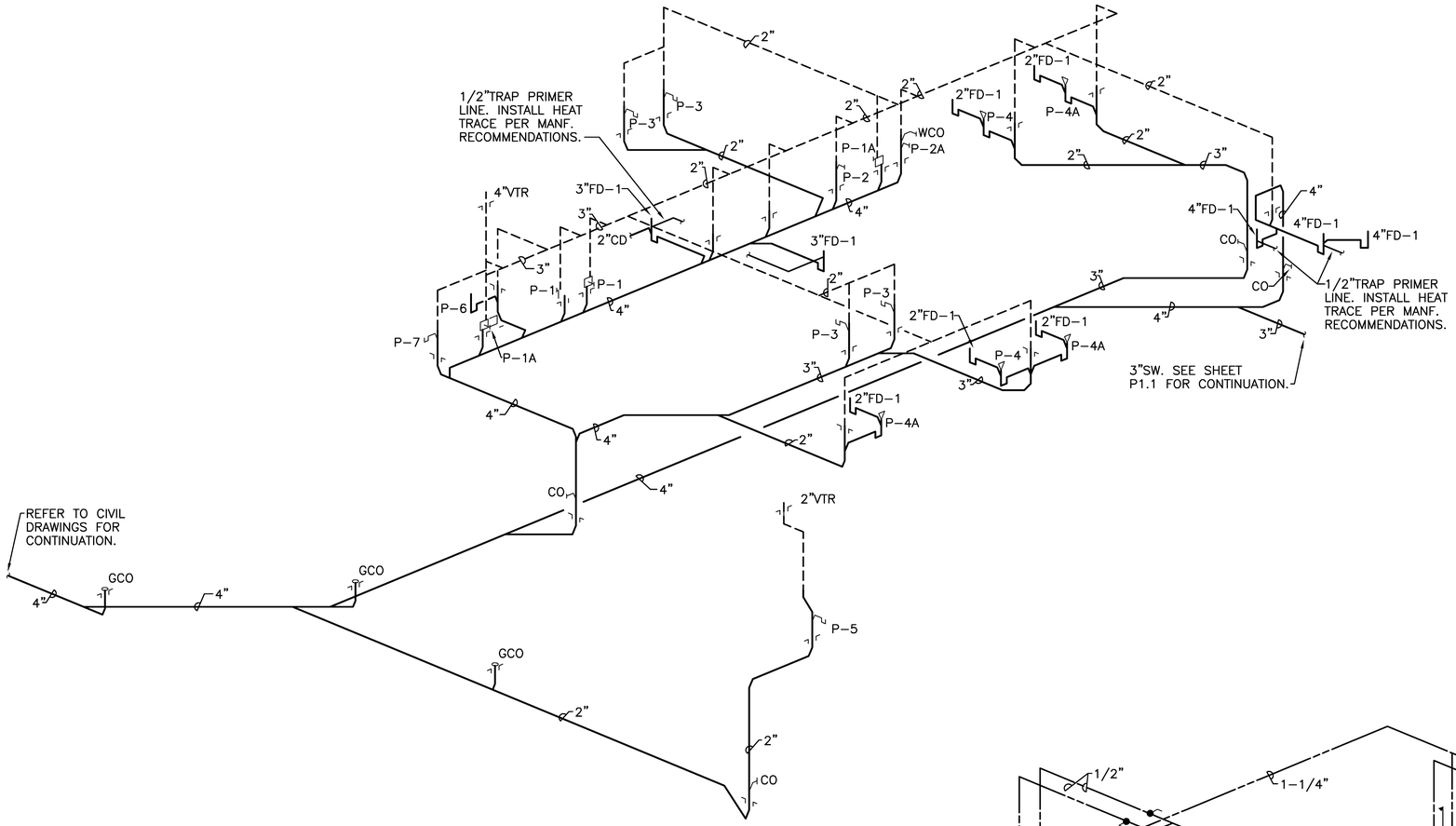

1 DWV RISER DIAGRAM
NO SCALE

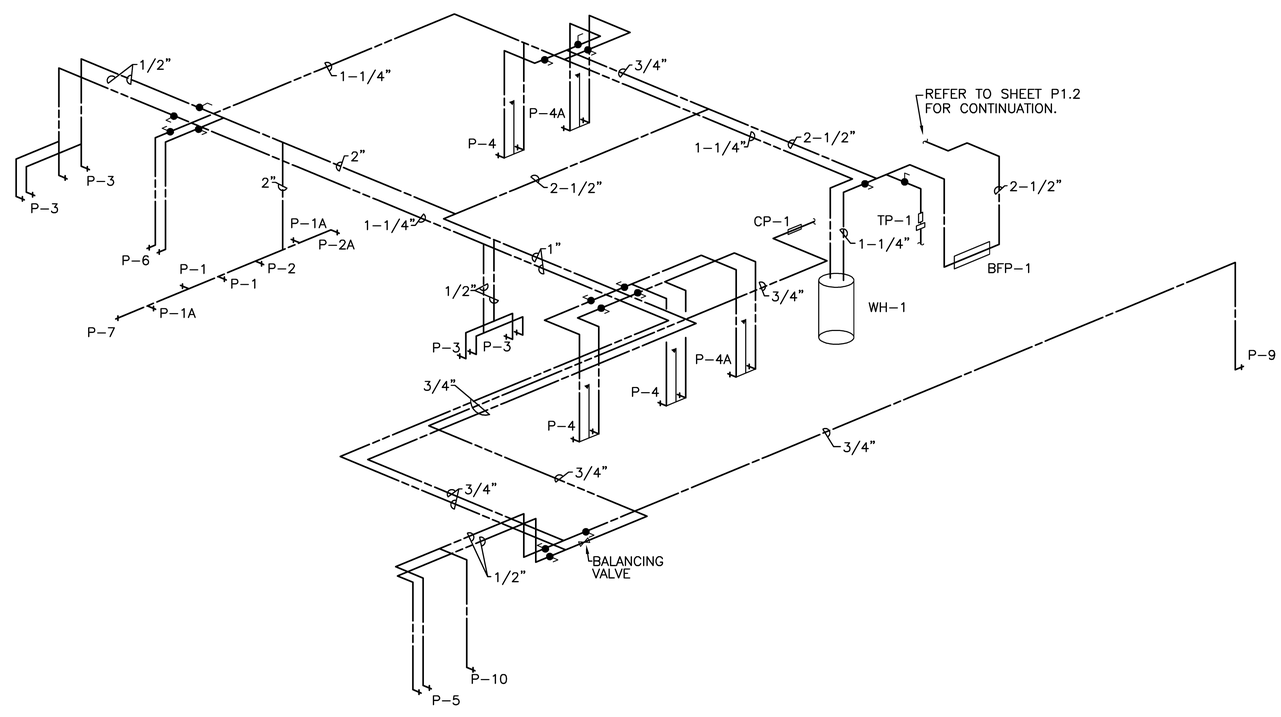

2 WATER RISER DIAGRAM
NO SCALE

Allen&Hoshall
engineering since 1915
1661 International Drive Memphis, TN 38120
901 820 0820 fax 901 683 1001
www.allenhoshall.com

CLARK/DIXON ARCHITECTS
2035 MADISON AVENUE / MEMPHIS, TN 38104
clarkdixonarchitects.com

SHELBY COUNTY SHERIFF'S OFFICE
RANGE OPERATIONS BUILDING
800 DOVECREST
MEMPHIS, TENNESSEE

SEAL
JASON RANDAL CREASY MEEHAN
REGISTERED ENGINEER
No. 00104444
TENNESSEE

REVISIONS:

DATE:
AUGUST 28, 2012

DRAWN BY:
AMB

SHEET TITLE:
RISER DIAGRAMS - PLUMBING

SHEET NO:
P2.1