GENERAL:
1. SEE ARCHITECTURAL DRAWINGS FOR ANGLES, CLIPS, BARS, PLATES AND OTHER ITEMS ATTACHED TO STRUCTURAL MEMBERS.
2. PROVIDE TEMPORARY BRACING AS REQUIRED TO MAINTAIN ALIGNMENT AND SECURITY OF STRUCTURES DURING CONSTRUCTION.
3. DO NO CUTTING, DRILLING, OR MODIFYING OF STRUCTURAL MEMBERS WITHOUT THE APPROVAL OF THE ENGINEER.
4. THE GENERAL CONTRACTOR SHALL VERIFY ALL DIMENSIONS AND SITE CONDITIONS BEFORE STARTING WORK. THE ARCHITECT SHALL BE NOTIFIED OF ANY DISCREPANCY.
5. THE DESIGN ADEQUACY AND SAFETY OF ERECTION BRACING, SHORING, ETC.., IS THE SOLE RESPONSIBILITY OF THE CONTRACTOR.
6. THE CONTRACTOR SHALL COORDINATE THE ARCHITECTURAL, CIVIL, MECHANICAL, PLUMBING AND ELECTRICAL DRAWINGS WITH THE STRUCTURAL DRAWINGS.
7. CONTRACTOR TO VERIFY ALL WALL, COLUMN, AND SLAB LOCATIONS, THICKNESS, AND DIMENSIONS WITH ARCHITECTURAL DRAWINGS.
8. THE GENERAL CONTRACTOR SHALL COORDINATE THE PLACEMENT OF FOOTINGS. COLUMNS, SLAB, WALLS, SHAFTS, ETC.., WITH ALL SUBCONTRACTORS INVOLVED.
9. FOUNDATIONS ARE DESIGNED FOR AN **ASSUMED** SOILS BEARING CAPACITY OF **2000 psf** FOR STRIP AND WALL FOOTINGS. THE BOTTOM OF ALL FOOTINGS ARE TO BE PLACED BELOW THE FROST DEPTH.
10. THE CONTRACTOR SHALL BE RESPONSIBLE FOR HIRING A GEOTECHNICAL ENGINEER TO VERIFY THE SOIL BEARING CAPACITY PRIOR TO CONSTRUCTION. THE FINAL REPORT SHALL BE FORWARDED TO THE ENGINEER OF RECORD PRIOR TO CONSTRUCTION FOR REVIEW.
11. VERIFY ALL OPENING SIZES AND LOCATIONS ON THE STRUCTURAL DRAWINGS w/ THE MECHANICAL DRAWINGS.
12. DRAWINGS SHALL NOT BE SCALED.

STRUCTURAL STEEL:
1. STRUCTURAL STEEL SHALL CONFORM TO ASTM SPECIFICATION A992 (Fy=50ksi).
2. STRUCTURAL STEEL SHALL BE DETAILED IN ACCORDANCE WITH STANDARD PRACTICES OF A.I.S.C.
3. STRUCTURAL STEEL TO BE DESIGNED, FABRICATED, ERECTED, ETC., AS PER AISC MANUAL OF STEEL CONSTRUCTION, LATEST EDITION.
4. SUBMIT SHOP DRAWINGS OF STRUCTURAL STEEL PRIOR TO FABRICATION OF SAME.
5. VERIFY w/ ARCHITECT, MECHANICAL, AND ELECTRICAL DRAWINGS FOR STAIR DETAILS, RAILINGS, ANGLES, ETC., NOT SHOWN ON STRUCTURAL DRAWINGS.
6. SEE ARCHITECTURAL DRAWINGS FOR MATERIAL TYPES AND LOCATIONS.
7. PROVIDE ALL NECESSARY CLIP ANGLES, BOLTS, HANDRAILS, ETC., TO COMPLETE PROJECT.
8. STEEL TUBES SHALL BE ASTM A500 GRADE B.

METAL BUILDING NOTES:
1. PRE-ENGINEERED BUILDING COMPONENTS SHALL BE DESIGNED BY A LICENSED PROFESSIONAL ENGINEER.
2. FOUNDATION HAS BEEN DESIGNED UTILIZING THE REACTION LOADS BY **BIGBEE CUSTOM STEEL BUILDINGS**. SUBMIT SHOP DRAWINGS AND SEALED CALCULATIONS INCLUDING FRAME REACTIONS TO THE "ENGINEER OF RECORD" PRIOR TO FOUNDATION CONSTRUCTION.
3. ANCHOR BOLTS SHALL BE A307 U.N.O.
4. ANCHOR BOLT LOCATIONS ARE THE RESPONSIBILITY OF THE GENERAL CONTRACTOR AND THE PRE-ENGINEERED BUILDING SUPPLIER. SUBMIT ANCHOR BOLT PLACEMENT PLANS FOR APPROVAL.
5. METAL BUILDING FRAME SHALL BE DESIGNED TO RESIST THE LATERAL FORCES GENERATED BY THE MASONRY IN A SEISMIC EVENT.

CONCRETE & MASONRY:
1. CONCRETE STRENGTH: U.N.O. ALL OTHERS TO BE 4000 PSI AT 28 DAYS
   CONCRETE SLAB-ON-GRADE: 3500 PSI
   FOOTING: 3500 PSI
   (SEE NOTE #3 CONCERNING TESTING OF CONCRETE)
2. CONCRETE EXPOSED TO WEATHER TO BE AIR - ENTRAINED (6% MAX. - 3% MIN.)
3. CONCRETE AND REINFORCING STEEL TO BE AS PER THE LATEST ACI 318.
   TESTING OF CONCRETE TO BE IN ACCORDANCE w/ ACI 301 BY AN INDEPENDENT TESTING AGENCY AT OWNERS EXPENSE.
4. ALL SLAB ON GRADE TO BE 4" CONCRETE w/ 6x6 W2.1/W2.1 WWF ON 6" GRANULAR MAT, UNLESS NOTED OTHERWISE.
5. THE MINIMUM CONCRETE COVER SHALL BE IN ACCORDANCE WITH A.C.I. 318.
6. ALL HOLLOW CONCRETE MASONRY UNITS TO MEET A.S.T.M. SPECIFICATIONS C90, GRADE N, TYPE 1, WITH MINIMUM ULTIMATE COMPRESSIVE PRISM STRENGTH (f'm) OF 1500 PSI FOR ALL WALLS U.N.O.
7. ALL MORTAR SHALL MEET A.S.T.M. SPECIFICATIONS FOR TYPE "S" MORTAR EXCEPT AS SHOWN OTHERWISE WITH A MINIMUM COMPRESSIVE STRENGTH OF 1,800 P.S.I. ADDITIVES CONTAINING CALCIUM CHLORIDE SHALL NOT BE USED.
8. HORIZONTAL JOINT REINFORCING SHALL BE HEAVY AT 16" C.C. EXCEPT AS SHOWN OTHERWISE.
9. ALL MASONRY CORNERS SHALL HAVE 3 VOIDS REINFORCED w/ (1) #5 EACH VOID AND GROUTED.
10. ALL CELLS WHERE REINFORCING IS SPECIFIED SHALL BE FILLED w/ CONCRETE GROUT.
11. REINFORCING SHALL BE A-615 GRADE 60 EXCEPT #3 BARS SHALL BE GRADE 40 IN ACCORDANCE WITH LATEST A.S.T.M. SPECIFICATIONS.
12. REINFORCING IN ALL CONCRETE FOOTING AND WALLS SHALL BE CONTINUOUS AROUND CORNERS.
13. LAP ALL STEEL 36 BAR DIAMETER OR 18" MINIMUM AT SPLICES AND CORNERS.
14. GROUT SHALL CONFORM TO A.S.T.M. 476, 3000 PSI STRENGTH.
15. ALL BLOCK CELLS BELOW GRADE SHALL BE FILLED SOLID WITH CONCRETE OR GROUT.
16. CONSTRUCTION OF LOAD-BEARING CONCRETE MASONRY SHALL CONFORM TO SPECIFICATIONS BY THE NATIONAL CONCRETE MASONRY ASSOCIATION AND A.C.I. 531.
17. PROVIDE 2 #5 BARS EXTRA E.S. OF ALL OPENINGS IN CONCRETE SLABS U.N.O.
18. PROVIDE U-BLOCK LINTEL w/ 2 #5 BOT. OVER ALL OPENINGS IN MASONRY WALLS U.N.O. BEAR LINTELS 16" MIN E.E.
19. PROVIDE 1 #5 EXTRA VERTICAL BAR EACH SIDE OF OPENINGS IN MASONRY WALLS U.N.O.

METAL FRAMING NOTES:
1. ALL COLD FORMED LIGHT GAGE FRAMING SHALL BE DESIGNED BY A REGISTERED ENGINEER.
2. ALL METAL STUDS, HEADERS, BRACING, AND ACCESSORIES SHALL BE DETAILED AND FURNISHED BY THE METAL STUD SUPPLIER.
3. SHOP DRAWINGS AND CALCULATIONS SHOWING MEMBER SIZES, GAGES, LOCATIONS AND CONNECTION DETAILS SHALL BE SUBMITTED FOR THE ARCHITECT'S APPROVAL.
4. METAL FRAMING SHALL BE FABRICATED AND INSTALLED IN ACCORDANCE WITH AISI "COLD FORMED STEEL DESIGN MANUAL 8.
5. METAL STUD FRAMING ATTACHING TO STEEL BEAMS SHALL BE ATTACHED WITH DEFLECTION TRACKS.

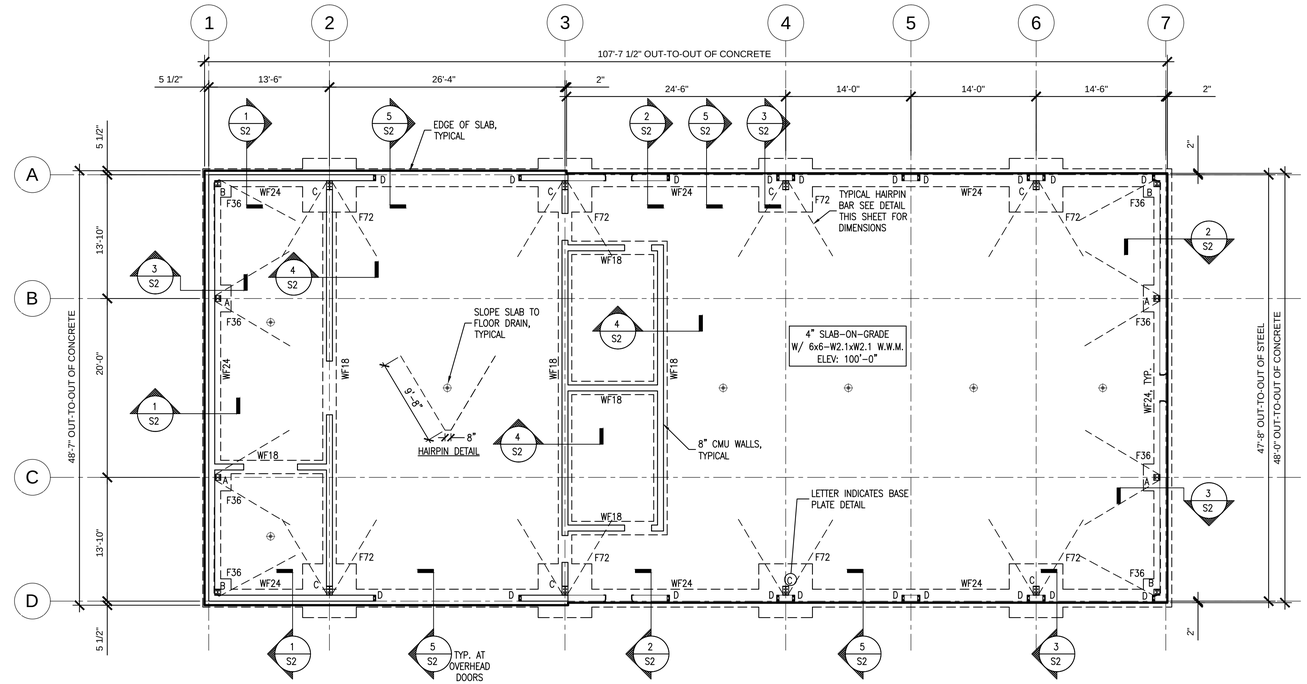

FOUNDATION PLAN
SCALE: 1/8" = 1'-0"

ANCHOR BOLT TABLE	
BASE PLATE	ANCHOR BOLT INFORMATION
DETAIL A	(4) ¾"ø X 18" EMBEDMENT A307 BOLTS
DETAIL B	(4) ¾"ø X 18" EMBEDMENT A307 BOLTS
DETAIL C	(4) ¾"ø X 18" EMBEDMENT A307 BOLTS
DETAIL D	(4) ½"ø X 6" EMBEDMENT A307 BOLTS

NOTES:
1. SEE BIGBEE CUSTOM STEEL BUILDINGS DRAWINGS FOR ANCHOR BOLT CONFIGURATION AND PLACEMENT INFORMATION.

WALL FOOTING SCHEDULE		
MARK	SIZE W x D x L	REINFORCING
WF18	1'-0" x 1'-6" x CONT.	(2) #5 BOT. CONT.
WF24	2'-0" x 2'-0" x CONT.	(2) #5 TOP & BOT. CONT. #4 AT 18" STIRRUPS

COLUMN FOOTING SCHEDULE		
MARK	SIZE	REINFORCING
F36	3'-0" x 3'-0" x 14"	(8) #5 x 3'-0" ½ E.W. BOT.
F72	6'-0" x 6'-0" x 14"	(12) #7 x 5'-6" ½ E.W. BOT.

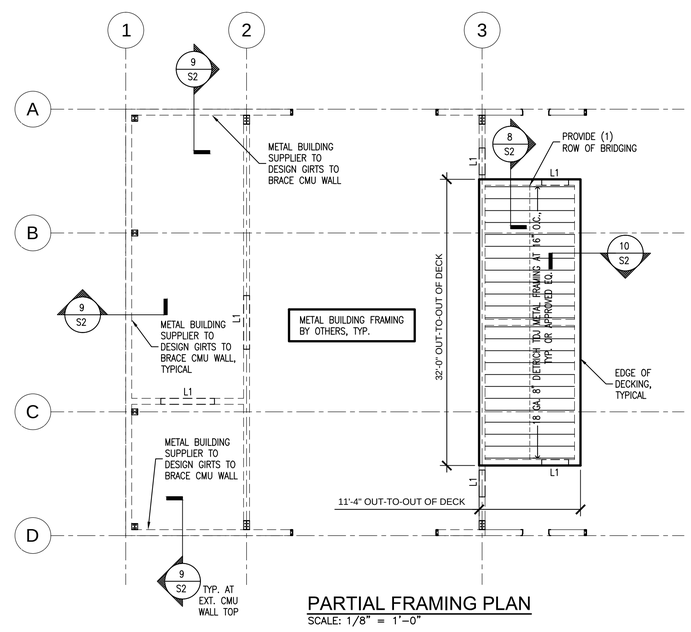

PARTIAL FRAMING PLAN
SCALE: 1/8" = 1'-0"

LINTEL SCHEDULE	
MARK	SIZE
L1	8"x24" U-BLOCK CMU LINTEL w/ 2 #5 BOT.

NOTE:
1. BEAR LINTELS 16" MIN. E.E. EXCEPT AS U.N.O.

NOTES:
1. 4" S.O.G. w/ 6x6-w2.1xw2.1 W.W.M.
2. T/SLAB EL.=100.00' FOR REFERENCE PURPOSES.
3. ——◒ INDICATES FTG. STEP SEE DETAIL 6/S2.
4. SEE 7/S2 FOR TYPICAL SLAB JOINT DETAILS.
5. VERIFY ALL DIMENSIONS W/ ARCHITECT, TYP.
6. ALL FOUNDATION LOADING BASED FROM BIGBEE CUSTOM STEEL BUILDINGS REACTIONS. IF ANOTHER METAL BUILDING MANUFACTURER IS UTILIZED, REACTIONS SHALL BE PROVIDED AND VERIFIED BY E.O.R.

Davis Patrikios Criswell engineers
7975 STAGE HILLS BLVD, SUITE I
MEMPHIS, TENNESSEE 38133
901.377.9984 office
901.290.0875 fax
www.dpcmemphis.com

revisions

no.	date

seal

john pruett architects
1869 madison ave.
memphis, tn 38104
(901) 721-9062
pruettarchitects@bellsouth.net
www.pruettarchitects.com

Shelby County Sheriff's Department
EQUIPMENT STORAGE BUILDING
989 Dovecrest Road, Memphis, TN 38134

BID DOCUMENT SET

sheet name
FOUNDATION PLAN AND GENERAL NOTES

date
April 29, 2014

S1

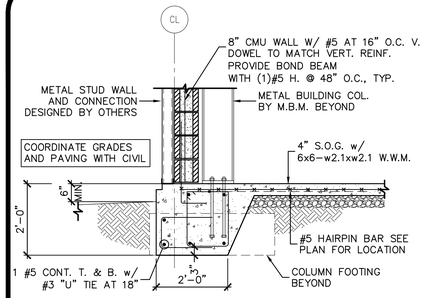

1 WF24 FOOTING SECTION AT EXT. 8" CMU
SCALE: 1/2"=1'-0" DET060

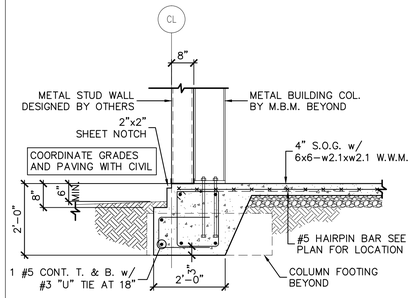

2 WF24 FOOTING SECTION WITH 8" L.G.
SCALE: 1/2"=1'-0" DET101

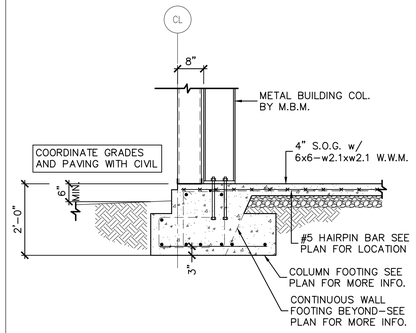

3 COLUMN FOOTING SECTION w/ 8" STUD
SCALE: 1/2"=1'-0" DET010

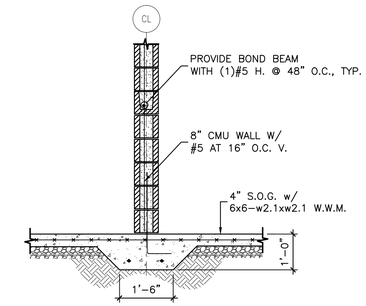

4 TYP. INTERIOR SECTION AT CMU
SCALE: 1/2"=1'-0" DET 006

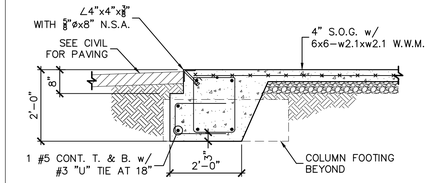

5 OVERHEAD DOOR EDGE OF CONC. DETAIL
SCALE: 1/2"=1'-0" DET102

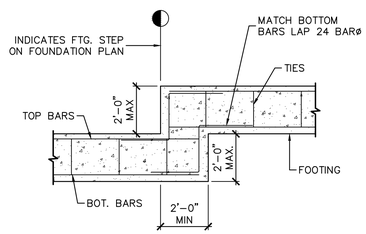

6 TYPICAL FOOTING STEP DETAIL
SCALE: 1/2"=1'-0" DET007

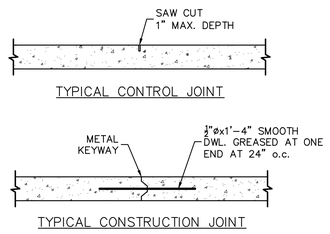

NOTE: CONTRACTOR SHALL SUBMIT PLAN OF LAYOUT OF CONSTRUCTION AND CONTROL JOINTS IN S.O.G. FOR APPROVAL BEFORE CONSTRUCTION. CONTROL JOINTS SHALL BE SPACED AT INTERVALS OF MAXIMUM 12'-0" IN EACH DIRECTION.

7 TYPICAL S.O.G. DETAILS
SCALE: 1"=1'-0" DET024

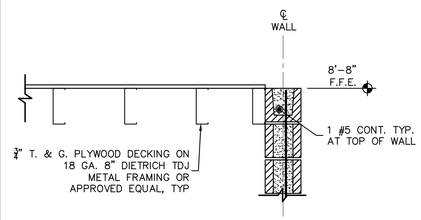

8 SECTION AT TOP OF CMU WALL
SCALE: 3/4"=1'-0" DET126

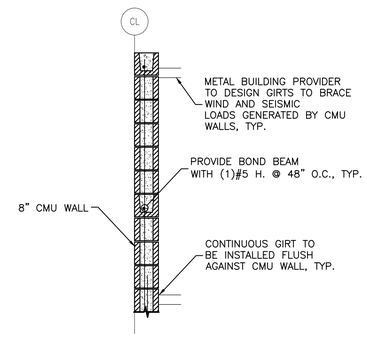

9 TYP. CMU WALL SUPPORT AT EXT.
SCALE: 1/2"=1'-0" DET 900

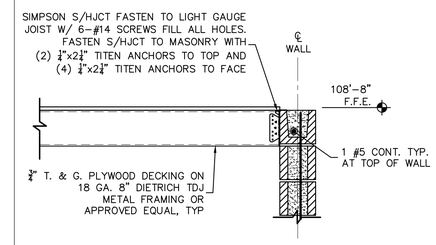

10 SECTION AT TOP OF CMU WALL
SCALE: 3/4"=1'-0" DET901

Davis
Patrikios
Criswell
engineers
7975 STAGE HILLS BLVD, SUITE 1
MEMPHIS, TENNESSEE 38133
901.377.9984 office
901.290.0875 fax
www.dpcmemphis.com

revisions

no.	date

seal

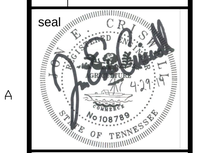

john pruett
architects
1869 madison ave.
memphis, tn 38104
(901) 721-9062
pruettarchitects@bellsouth.net
www.pruettarchitects.com

Shelby County Sheriff's Department
EQUIPMENT STORAGE BUILDING
989 Dovecrest Road, Memphis, TN 38134

BID DOCUMENT SET

sheet name
DETAILS

date
April 29, 2014

S2