PLUMBING LEGEND

SYMBOL	DESCRIPTION
	SOIL OR WASTE
A/C	A/C CONDENSATE
OIL	OIL WASTE (OIL)
	VENT
V.T.R.	VENT THRU ROOF
	COLD WATER (C.W.)
	HOT WATER (H.W.)
	CUTOFF VALVE
	CHECK VALVE
	BACKFLOW PREVENTER
OG	P-TRAP
	SINK/LAVATORY P-TRAP
	CLEANOUT
FD	FLOOR DRAIN
	PIPE RISE
	PIPE DROP
FCO	FLOOR CLEAN-OUT
GCO	GRADE CLEAN-OUT
WCO	WALL CLEAN-OUT
O.H.D.	OPEN HUB DRAIN
T	TRAP PRIMER - 1/2" CW BELOW SLAB

PLUMBING FIXTURE SCHEDULE

MARK	DESCRIPTION	SOIL	WASTE	VENT	CW	HW	MXV	REMARKS
MS-1	MOP SINK	—	3"	2"	1/2"	1/2"		STERN WILLIAMS NO. HL-18Ø-BP-2 HILOW MODEL MOP SINK W/ NO. T-1Ø-VB FAUCET, NO. T-35 HOSE AND WALL BRACKET, NO. T-4Ø S/S MOP HANGER, TWO (2) STAINLESS STEEL BACKSPLASH PANELS.
S-1	SINK, TWO COMPARTMENT, (33" x 22")	—	2"	2"	1/2"	1/2"		ELKAY NO. DLRQ33221Ø STAINLESS STEEL SINK W/ LK-35-B CUP STRAINERS, KOHLER K-9Ø2Ø TRAP, K-16Ø71 SUPPLIES WITH LOOSE KEY STOPS, ELKAY LKE-41Ø1 FAUCET WITH SPRAY. (NOTE: REQUIRES MINIMUM 36" WIDE CABINET BASE.)
FCO	FLOOR CLEANOUT	—	—	—	—	—		ZURN ZN-14ØØ CAST IRON CLEANOUT WITH ADJUSTABLE BRASS TOP, BRASS PLUG, AND ROUND, SECURED SCORIATED COVER.
GCO	GROUND CLEANOUT	—	—	—	—	—		ZURN ZN-14ØØ CAST IRON CLEANOUT WITH ADJUSTABLE BRASS TOP, BRASS PLUG, AND ROUND, SECURED SCORIATED COVER SET IN 18" x 18" x 6" CONCRETE PAD.
TRAP PRIMER	TRAP PRIMER	—	—	—	—	—		ZURN Z-1Ø22 TRAP PRIMER WITH VACUUM BREAKER. CONNECT TO NEAREST LAVATORY OR SINK CW SUPPLY. PROVIDE ACCESS COVER.
NFHB	NON-FREEZE HOSE BIBB	—	—	—	3/4"	—		ZURN NO. Z-131Ø WITH INTEGRAL VACUUM BREAKER, SELF DRAINING, LOOSE KEY OPERATING HANDLE.
HB-1	MILD CLIMATE HOSE BIBB	—	—	—	3/4"	—		ZURN NO. Z-1341-BFP WITH VACUUM BREAKER, SELF DRAINING, WHEEL OPERATING HANDLE.
FD-1	FLOOR DRAIN	—	—	—	—	—		ZURN ZN-415-6 CAST IRON FLOOR DRAIN WITH 6" ROUND ADJUSTABLE NICKEL BRASS STRAINER. PROVIDE SQUARE STRAINER AT TILE FLOORING.
CB-1	CATCH BASIN	—	—	—	—	—		ZURN NO Z887-12-DGC-HD 12" x 24" x 24" HDPE CATCH BASIN WITH CLASS C DUCTILE IRON SLOTTED GRATE & EXTRA HEAVY DUTY FRAME ASSEMBLY WITH ANCHOR STUDS.

GENERAL PLUMBING NOTES

1. THESE DRAWINGS ARE DIAGRAMMATIC AND SHOW GENERAL PLUMBING LAYOUTS AND PIPE ROUTING FOR BIDDING PURPOSES ONLY. IT IS THE RESPONSIBILITY OF THE CONTRACTOR TO PREPARE DETAILED SHOP DRAWINGS AND TO CONFIRM SPACE ALLOCATIONS.
2. SEE ARCHITECTURAL AND STRUCTURAL DRAWINGS FOR ALL BUILDING DIMENSIONS, DETAILS, ELEVATIONS, AND EXACT LOCATION OF FIXTURES.
3. CONTRACTOR SHALL VERIFY ALL FLOW LINES PRIOR TO ROUGHING IN.
4. ALL WORK SHALL CONFORM TO THE LOCAL PLUMBING CODE, LOCAL BUILDING CODES, AND STATE HEALTH REGULATIONS HAVING JURISDICTION. ALL HAND LAVS DESIGNATED AS HANDICAPPED WITH EXPOSED PIPING SHALL BE PROVIDED WITH INSULATION KITS COVERING SINK DRAINS AND SINK SUPPLIES.
5. PLUMBING CONTRACTOR SHALL REVIEW ARCHITECTURAL, STRUCTURAL, ELECTRICAL, SPRINKLER AND MECHANICAL DRAWINGS AND COORDINATE HIS WORK WITH ALL OTHER TRADES FOR PIPE ROUTING AND EQUIPMENT PLACEMENT. AVOID INTERFERENCE WITH ARCHITECTURAL FEATURES, BEAMS, FOOTINGS, WINDOWS, ETC. NOTIFY ARCHITECT OF ANY CONFLICTS.
6. CONTRACTOR MAY RE-ROUTE PLUMBING TO AVOID CONFLICT WITH OTHER TRADES AFTER FIRST RECEIVING THE APPROVAL OF THE ARCHITECT / ENGINEER.
7. PLUMBING CONTRACTOR SHALL COORDINATE WITH ELECTRICAL CONTRACTOR ALL VOLTAGES, ELECTRICAL LOADS, ETC. OF ELECTRICALLY OPERATED EQUIPMENT PRIOR TO ORDERING. ALL WIRING BY ELECTRICAL CONTRACTOR.
8. PLUMBING CONTRACTOR SHALL FURNISH ACCESS PANELS TO BE INSTALLED BY GENERAL CONTRACTOR AS REQUIRED FOR PLUMBING INSTALLATIONS.
9. ALL VALVES SHALL BE ACCESSIBLE.
10. SLEEVES SHALL BE INSTALLED WHERE PIPING PASSES THROUGH STRUCTURE.
11. ALL PENETRATIONS THRU RATED WALLS OR FLOORS SHALL BE SEALED WITH AN APPROVED U.L. LISTED FIREPROOFING TO MAINTAIN THE INTEGRITY OF THE WALL OR FLOOR.
12. PIPE VIBRATION AND/OR PIPE SWAY WILL NOT BE PERMITTED.
13. PROVIDE SUITABLE BACKING AND SUPPORT FOR ALL PLUMBING FIXTURES.
14. OFFSET ALL V.T.R.'S AS REQUIRED WHETHER OR NOT SHOWN ON DRAWINGS.
15. ALL V.T.R.'S SHALL BE A MINIMUM OF 15 FT. AND/OR AS REQUIRED BY CODE AWAY FROM A/C INTAKES WHETHER OR NOT SHOWN ON PLANS.
16. ALL PIPING SHALL BE LABELED.
17. UPON COMPLETION OF WORK COVERED BY THIS CONTRACT, FURNISH THE OWNER WITH ONE (1) SET OF REPRODUCIBLE "AS-BUILT" DRAWINGS WHICH SHOW ALL PLUMBING INSTALLED UNDER THIS CONTRACT.
18. ALL WATER LINES RUN IN EXTERIOR WALLS SHALL BE LOCATED BETWEEN GYPBOARD & INSULATION TO PREVENT FREEZING. INSULATE ALL WATER LINES IN EXTERIOR WALLS WITH 2" THICK INSULATION. EXTERIOR WALL BUILDING INSULATION SHALL COMPLETELY ENCOMPASS INSULATED PLUMBING PIPING WITHIN STUD CAVITY.
19. ALL HOLES THRU CONCRETE SHALL BE CORE-DRILLED. SAW-CUT ALL CONCRETE AND ASPHALT BEFORE BREAKING AND REMOVING.
20. INFORMATION OF EXISTING SERVICES WAS TAKEN FROM OWNER'S DRAWINGS. FIELD LOCATE ALL EXISTING SERVICES PRIOR TO STARTING ANY WORK.
21. IT IS THE RESPONSIBILITY OF THE CONTRACTOR TO ENSURE THAT ALL WATER DISTRIBUTION PIPING IS ROUTED IN AREAS THAT ARE NOT SUBJECT TO FREEZING TEMPERATURES. IF PIPING IS SHOWN ROUTED IN SUCH AREAS AND NO PROVISION FOR FREEZE PROTECTION IS INDICATED, THE CONTRACTOR SHALL NOTIFY THE ARCHITECT / ENGINEER IMMEDIATELY.
22. ALL ELEVATIONS, INCLUDING PIPE INVERTS, FINISHED FLOOR SLAB, FINISHED GRADE, ETC., ARE FOR REFERENCE ONLY. CONTRACTOR SHALL REFER TO ARCHITECTURAL, CIVIL, AND STRUCTURAL DRAWINGS FOR EXACT ELEVATIONS AND VERIFY ALL ELEVATIONS PRIOR TO BEGINNING CONSTRUCTION. CONTRACTOR SHALL MODIFY INSTALLATION AS REQUIRED TO MEET ELEVATIONS.
23. IT IS THE RESPONSIBILITY OF THE CONTRACTOR TO APPLY FOR AND OBTAIN THE REQUIRED PERMIT FROM THE AUTHORITY HAVING JURISDICTION FOR ANY WORK THAT INVOLVES THE INSTALLING, ENLARGING, ALTERING, REPAIRING, MOVING, OR REPLACING OF A PLUMBING SYSTEM PRIOR TO CONSTRUCTION.

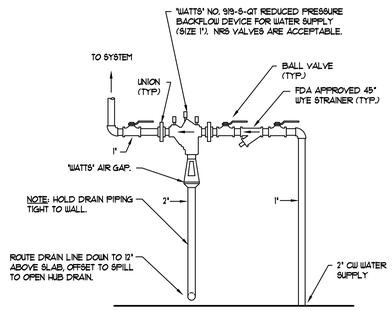

REDUCED PRESSURE BACKFLOW ASSEMBLY
NO SCALE

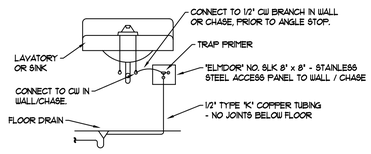

TRAP PRIMER DETAIL
NO SCALE

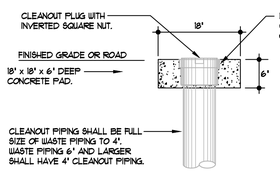

CONCRETE CLEAN-OUT PAD
NO SCALE

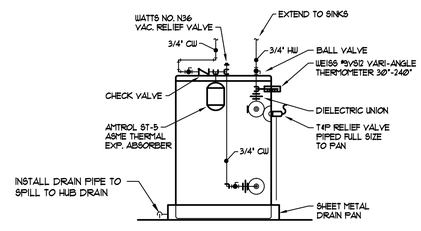

"STATE" NO. PCE-2Ø-18MSA ELECTRIC WATER HEATER, 2Ø GAL., 21.25" DIA. x 21.75" TALL, 12Ø V, 3 kW, SINGLE PHASE

ELECTRIC WATER HEATER DETAIL
NO SCALE

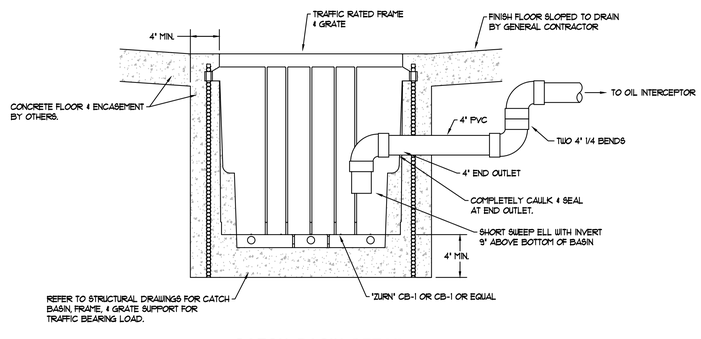

CATCH BASIN DETAIL
NO SCALE

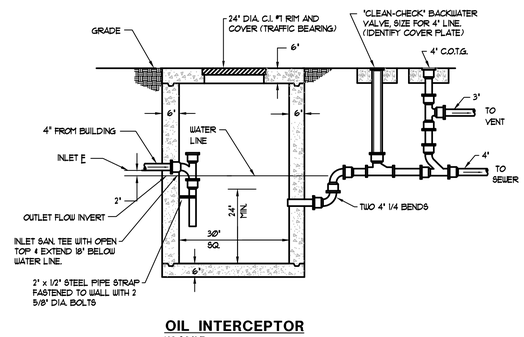

OIL INTERCEPTOR
NO SCALE

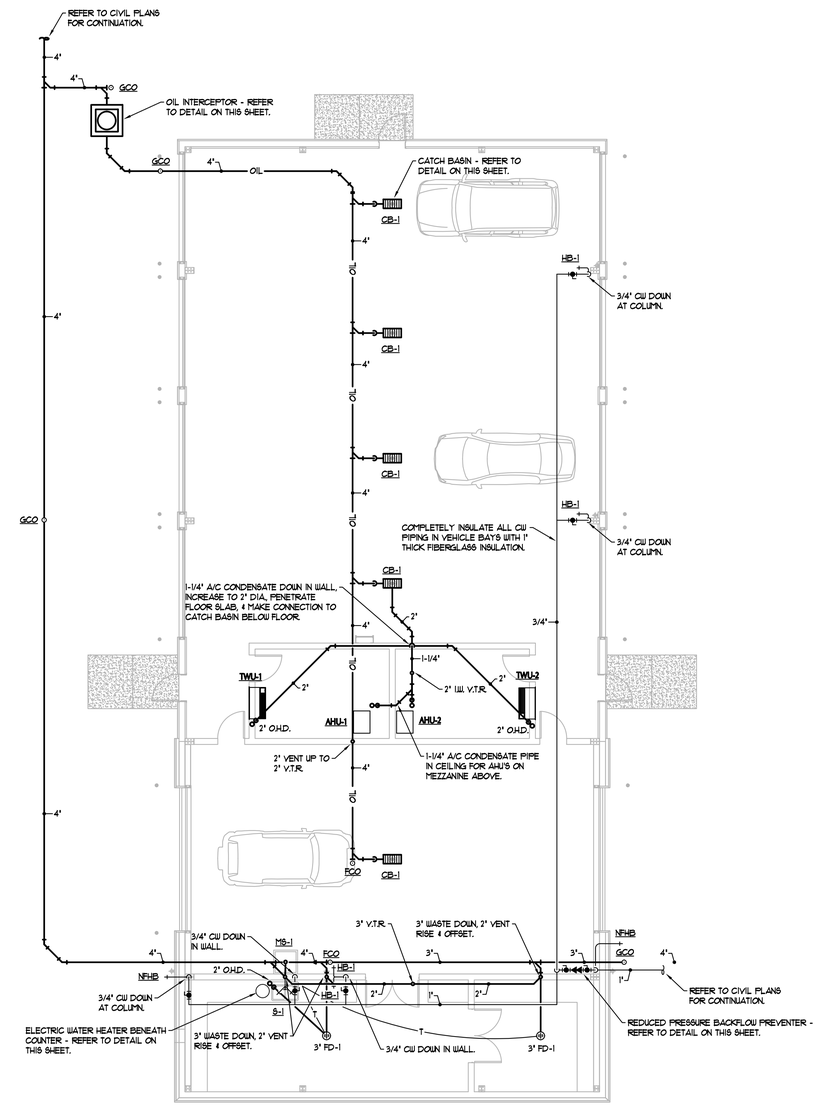

1 / P1 FLOOR PLAN - PLUMBING
1/8" = 1'-0"

BCM
BARHAM/CAIN/MYNATT
incorporated
Consulting Engineers
1015 Cordova Station Road Cordova, Tennessee 38018
Phone: (901) 685-2371 Fax: (901) 682-0233

revisions

no.	date

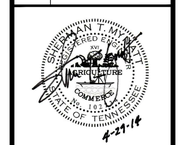

john pruett architects
1869 madison ave.
memphis, tn 38104
(901) 721-9062
pruettarchitects@bellsouth.net
www.pruettarchitects.com

Shelby County Sheriff's Department
EQUIPMENT STORAGE BUILDING
989 Dovecrest Road, Memphis, TN 38134

sheet name
OVERALL FLOOR PLAN - PLUMBING

date
April 29, 2014

P1