DOOR SCHEDULE

DOOR							FRAME			DETAILS				
MARK	WIDTH	HEIGHT	THICK	MAT.	FINISH	TYPE	FINISH	MAT.	TYPE	HEAD	JAMB	T'HOLD	HARDWARE SET (SEE SPECS)	NOTES
01	3'-0"	7'-0"	1-3/4"	HM	PRE-FIN		PRE-FIN	HM		1/A4	2/A4	3/A4	SET #05	NOTE: 1, 2
02	12'-0"	14'-0"	-	COILING	PRE-FIN		PAINT			6/A4	7/A4	8/A4	BY DOOR MANUF.	NOTE: 2
03	12'-0"	14'-0"	-	COILING	PRE-FIN		PAINT			6/A4	7/A4	8/A4	BY DOOR MANUF.	NOTE: 2
04	12'-0"	14'-0"	-	COILING	PRE-FIN		PAINT			6/A4	7/A4	8/A4	BY DOOR MANUF.	NOTE: 2
05	12'-0"	14'-0"	-	COILING	PRE-FIN		PAINT			6/A4	7/A4	8/A4	BY DOOR MANUF.	NOTE: 2
06	3'-0"	7'-0"	1-3/4"	HM	PRE-FIN		PRE-FIN	HM		1/A4	2/A4	3/A4	SET #05	NOTE: 1
07	3'-0"	7'-0"	1-3/4"	HM	PAINT		PAINT	HM		4/A4	5/A4	-	SET #01	
08	12'-0"	14'-0"	-	SECTIONAL	PRE-FIN		PAINT			9/A4	10 & 11/A4	8/A4 SIM.	BY DOOR MANUF.	NOTE: 2
09	PR 3'-0"	7'-0"	1-3/4"	HM	PAINT		PAINT	HM		4/A4	5/A4	-	SET #03	
10	PR 3'-0"	7'-0"	1-3/4"	HM	PAINT		PAINT	HM		4/A4	5/A4	-	SET #02	
11	12'-0"	14'-0"	-	SECTIONAL	PRE-FIN		PAINT			9/A4	10 & 11/A4	8/A4 SIM.	BY DOOR MANUF.	NOTE: 2
12	3'-0"	7'-0"	1-3/4"	HM	PAINT		PAINT	HM		4/A4	5/A4	-	SET #01	
13	3'-0"	7'-0"	1-3/4"	HM	PRE-FIN		PRE-FIN	HM		1/A4	2/A4	3/A4	SET #05	NOTE: 1, 2
14	12'-0"	14'-0"	-	COILING	PRE-FIN		PAINT			6/A4	7/A4	8/A4	BY DOOR MANUF.	NOTE: 2
15	12'-0"	14'-0"	-	COILING	PRE-FIN		PAINT			6/A4	7/A4	8/A4	BY DOOR MANUF.	NOTE: 2
16	12'-0"	14'-0"	-	COILING	PRE-FIN		PAINT			6/A4	7/A4	8/A4	BY DOOR MANUF.	NOTE: 2
17	12'-0"	14'-0"	-	COILING	PRE-FIN		PAINT			6/A4	7/A4	8/A4	BY DOOR MANUF.	NOTE: 2
18	3'-0"	7'-0"	1-3/4"	HM	PAINT		PAINT	HM		4/A4	5/A4	-	SET #04	
19	3'-0"	7'-0"	1-3/4"	HM	PAINT		PAINT	HM		4/A4	5/A4	-	SET #04	

NOTES
1. DOORS AND FRAMES TO BE PROVIDED BY PRE-ENGINEERED METAL BUILDING MANUFACTURER.
2. STRUCTURAL FRAMED OPENING TO BE PROVIDED BY PRE-ENGINEERED METAL BUILDING MANUFACTURER. PAINT ALL EXPOSED SURFACES OF FRAME TO MATCH ASSOCIATED DOOR ASSEMBLY.

FINISH SCHEDULE

ROOM #	ROOM NAME	FLOOR	[SEE WALL TYPES LISTED BELOW] NORTH	EAST	SOUTH	WEST	CEILING MATERIAL	CEILING HT.
01	VEHICLE STORAGE AREA	CONCRETE	WT-1	WT-2	WT-4	WT-2	MTL.BLDG.MANUF. BATT INSULATION	..
02	FIELD OFFICE	CONCRETE	WT-6	WT-6	WT-6	WT-6	PERFORATED METAL	8'-0"
03	STORAGE	CONCRETE	WT-6	WT-6	WT-6	WT-6	PERFORATED METAL	8'-0"
04	EVIDENCE PROCESSING BAY	CONCRETE	WT-4	WT-5	WT-4	WT-5	MTL.BLDG.MANUF. BATT INSULATION	..
05	FINGERPRINT PROCESSING WORKROOM	CONCRETE	WT-4	WT-4	WT-5	WT-5	MTL.BLDG.MANUF. BATT INSULATION	..
06	SECURE EVIDENCE STORAGE	CONCRETE	WT-4	WT-5	WT-5	WT-4	MTL.BLDG.MANUF. BATT INSULATION	..
07	ENTRY	CONCRETE	N/A	N/A	WT-4	WT-3	MTL.BLDG.MANUF. BATT INSULATION	..
08	ENTRY	CONCRETE	N/A	WT-3	WT-4	N/A	MTL.BLDG.MANUF. BATT INSULATION	..

WALL TYPE DESCRIPTIONS

WT-1: FROM F.F. TO 8'-8" A.F.F.: METAL LINER PANEL BY METAL BUILDING MANUFACTURER (MBM).
FROM 8'-8" A.F.F. TO CLG: EXPOSED VINYL COVERED BATT INSULATION BY MBM

WT-2: FROM F.F. TO 14'-4" A.F.F.: EXPOSED VINYL COVERED BATT INSULATION BY MBM.
FROM 14'-4" A.F.F. TO CLG: TRANSLUCENT WALL PANEL BY MBM.

WT-3: FROM F.F. TO 8'-8" A.F.F.: METAL LINER PANEL BY MBM.
FROM 8'-8" A.F.F. TO CLG: TRANSLUCENT WALL PANEL BY MBM.

WT-4: FROM F.F. TO 8'-8" A.F.F.: UNPAINTED CMU
FROM 8'-8" A.F.F. TO CLG: METAL LINER PANEL BY MBM.

WT-5: FROM F.F. TO 8'-8" A.F.F.: UNPAINTED CMU
FROM 8'-8" A.F.F. TO CLG: EXPOSED VINYL COVERED BATT INSULATION BY MBM.

WT-6: FROM F.F. TO CLG.: UNPAINTED CMU

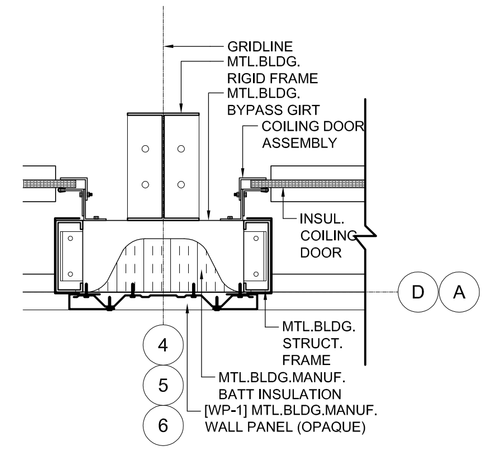

16 / A4 TYP.DETAIL 1"=1'-0"

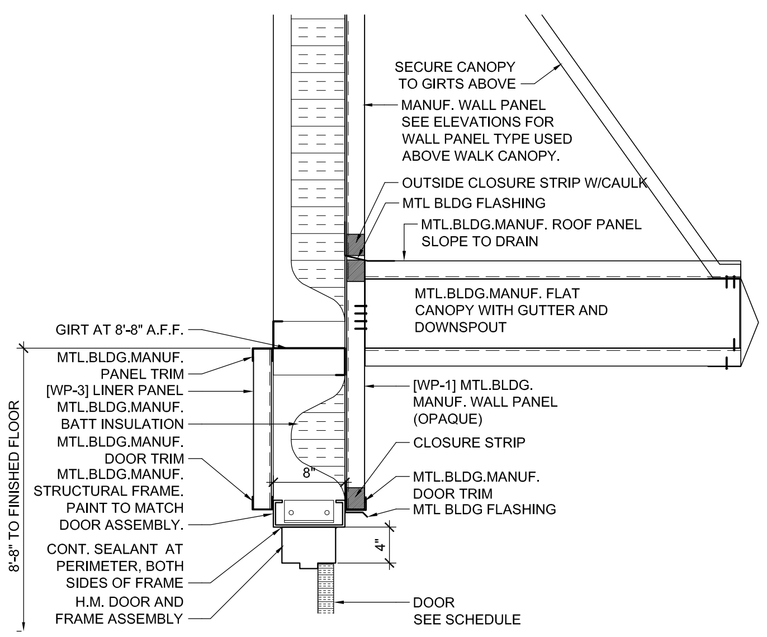

1 / A4 HEAD / DETAIL 1"=1'-0"

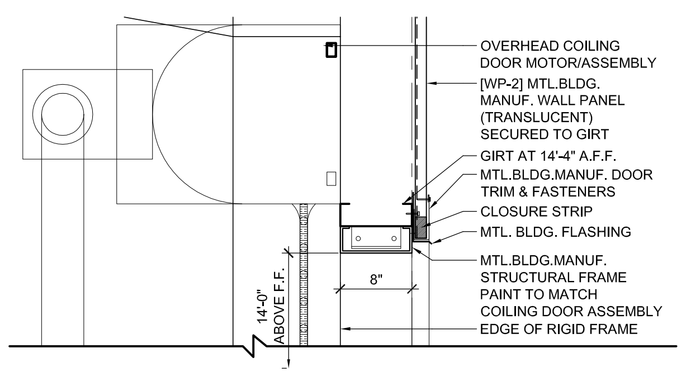

6 / A4 HEAD 1"=1'-0"

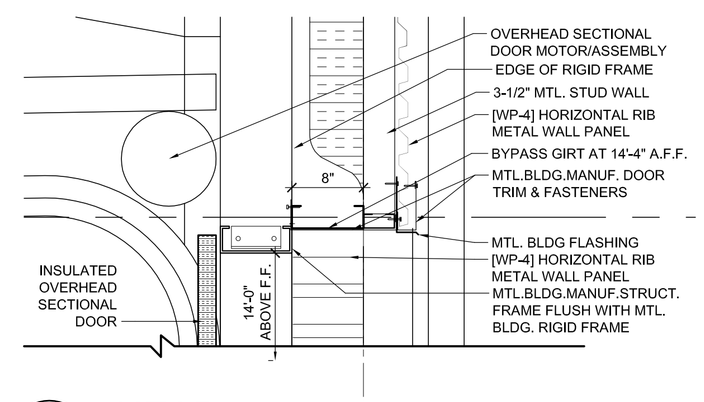

9 / A4 HEAD 1"=1'-0"

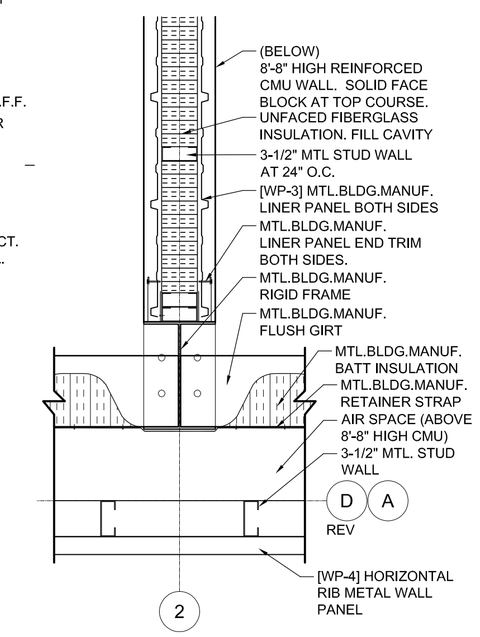

12 / A4 DET.ABOVE 8'-8" A.F.F. 1"=1'-0"

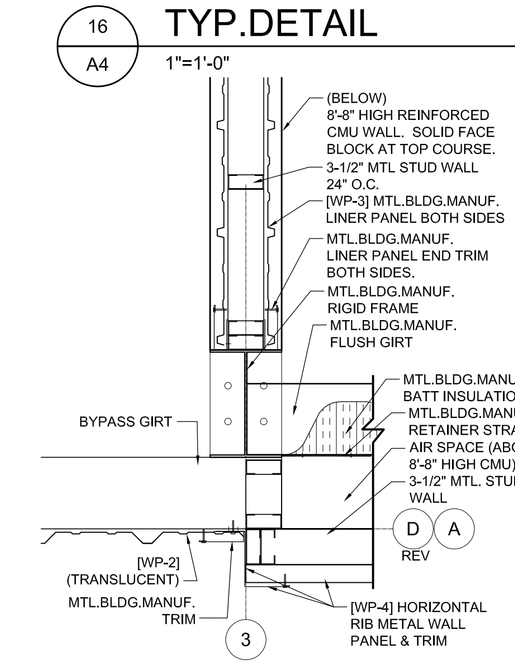

14 / A4 DET.ABOVE 8'-8"A.F.F. 1"=1'-0"

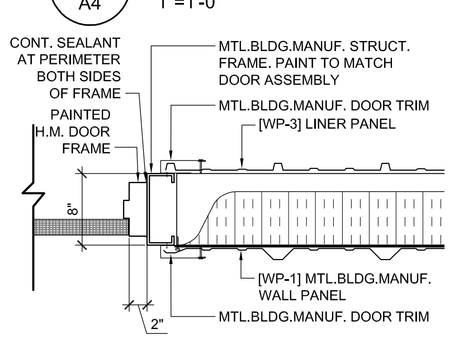

2 / A4 JAMB 1"=1'-0"

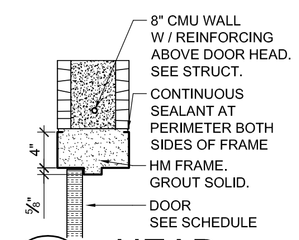

4 / A4 HEAD 1"=1'-0"

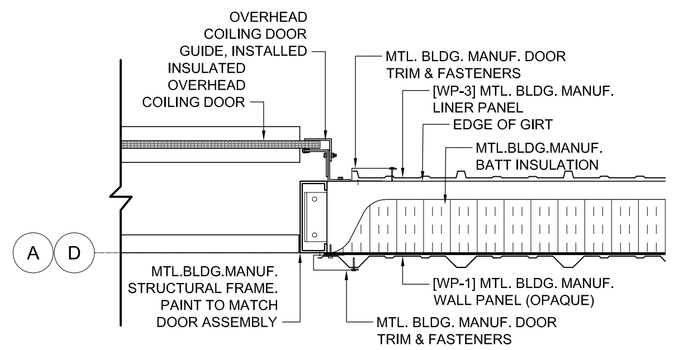

7 / A4 JAMB 1"=1'-0"

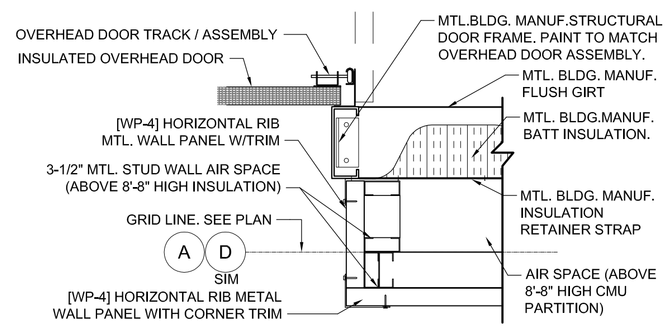

10 / A4 JAMB (ABOVE 8'-8"A.F.F.) 1"=1'-0"

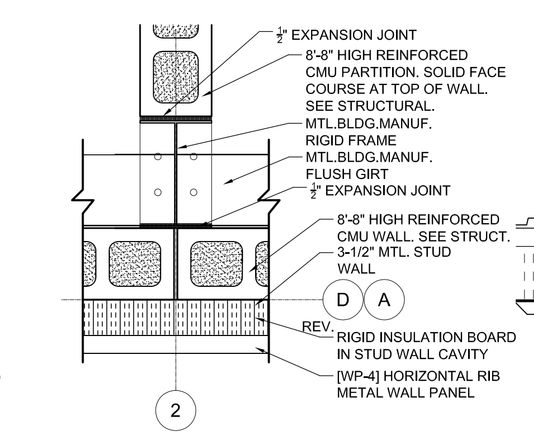

13 / A4 DET.BELOW 8'-8" A.F.F. 1"=1'-0"

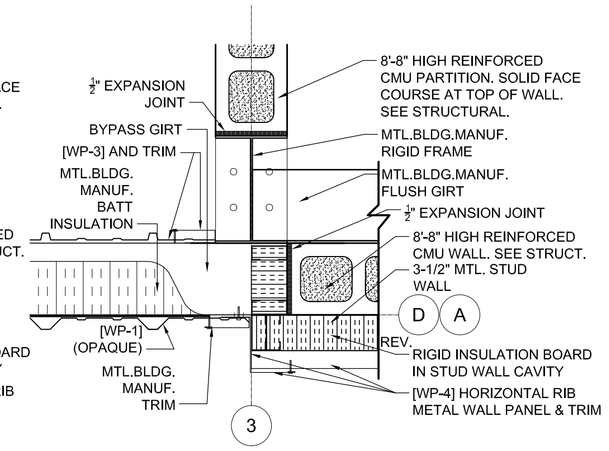

15 / A4 DET.BELOW 8'-8"A.F.F. 1"=1'-0"

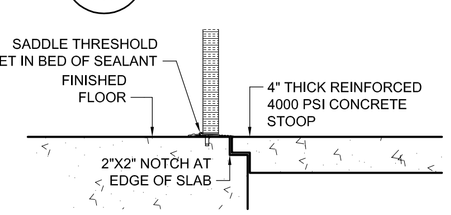

3 / A4 THRESHOLD 1"=1'-0"

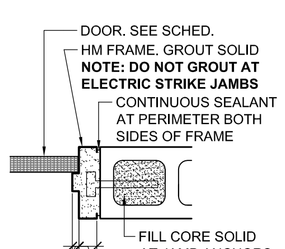

5 / A4 JAMB 1"=1'-0"

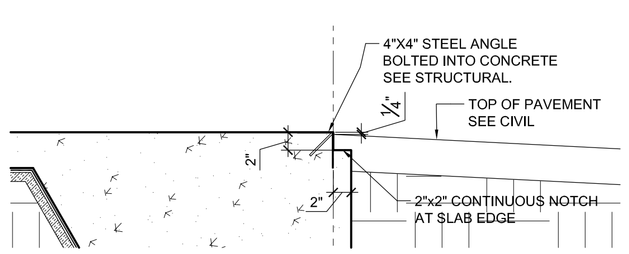

8 / A4 THRESHOLD 1"=1'-0"

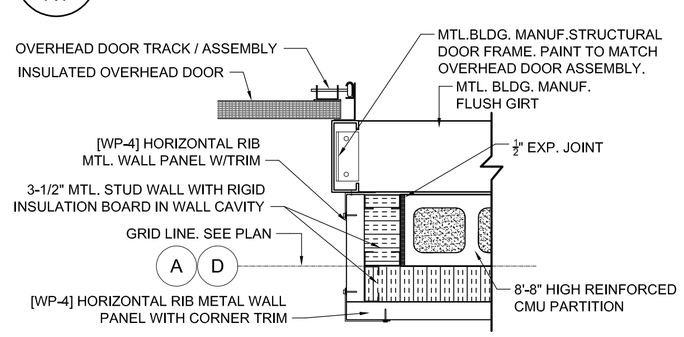

11 / A4 JAMB (BELOW 8'-8"A.F.F.) 1"=1'-0"

revisions

no.	date

seal

john pruett architects
1869 madison ave.
memphis, tn 38104
(901) 721-9062
pruettarchitects@bellsouth.net
www.pruettarchitects.com

Shelby County Sheriff's Department
EQUIPMENT STORAGE BUILDING
989 Dovecrest Road, Memphis, TN 38134

BID DOCUMENT SET

sheet name
SCHEDULES AND DETAILS

date
April 29, 2014

A4