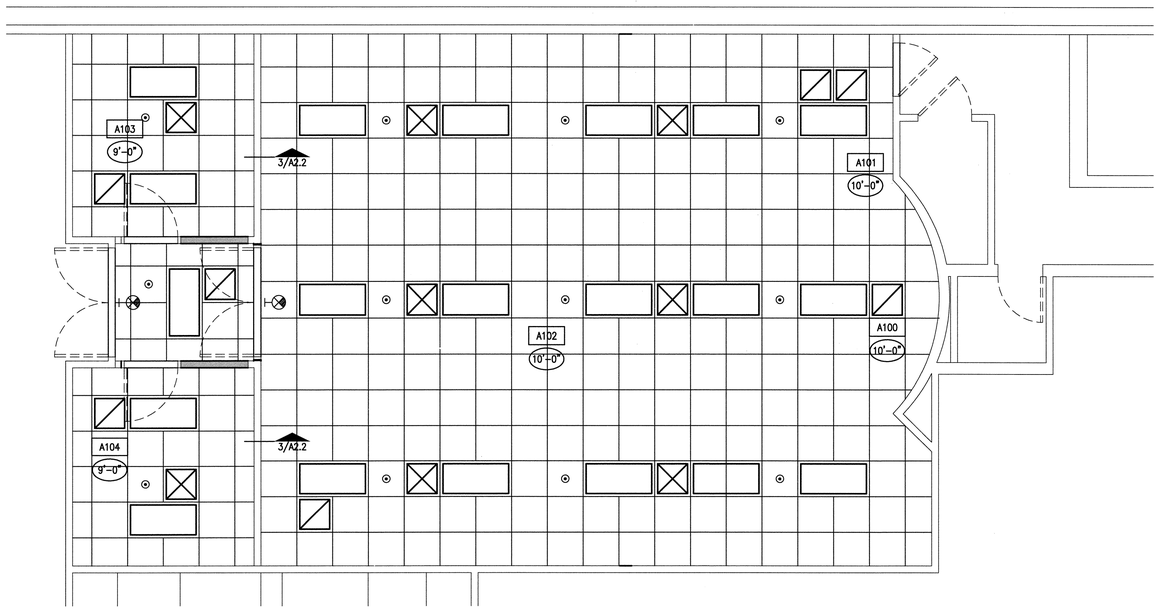

NORTH

1 REFLECTED CEILING PLAN
1/4" = 1'-0

REFLECTED CEILING PLAN LEGEND

1. REF. FINISH SCHEDULE FOR ALL CEILING HEIGHTS
2. REF. ELECT. DRAWINGS FOR ALL LIGHTING TYPES
3. COORDINATE ALL SPRINKLER HEADS & PIPING WITH ALL LIGHTING, SUPPLY & RETURN VENTS, ETC.

- NEW 2' X 2' CEILING TILE & GRID SYSTEM REF. FINISH SCHEDULE
- 2' x 4' FLUORESCENT LIGHT FIXTURE - REF. ELECT.
- 2' x 4' FLUORESCENT NIGHT LIGHT FIXTURE - REF. ELECT.
- EXIT SIGN
- RETURN AIR GRILL - REF. MECH.
- SUPPLY AIR GRILL - REF. MECH.

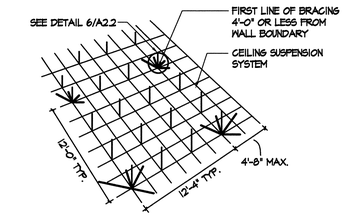

5 CEILING SUSPENSION SYSTEM
NO SCALE

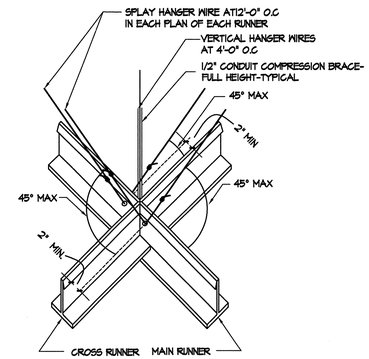

6 SEISMIC BRACING DETAIL
NO SCALE

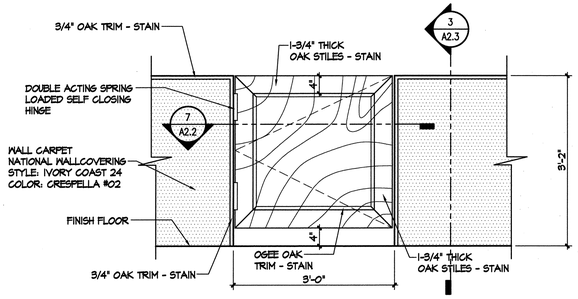

2 GATE ELEVATION
3/4" = 1'-0"

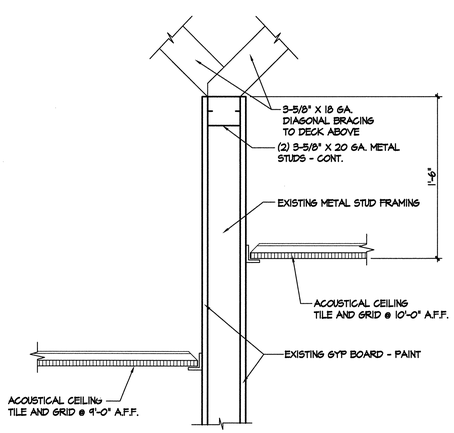

3 BRACING @ EXIST. WALL
1 1/2" = 1'-0"

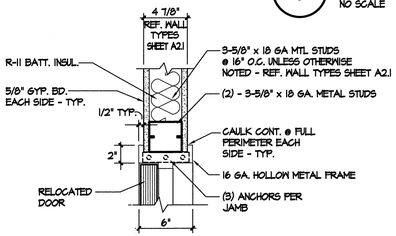

4 JAMB DETAIL HEAD SIM.
1 1/2" = 1'-0" 13020

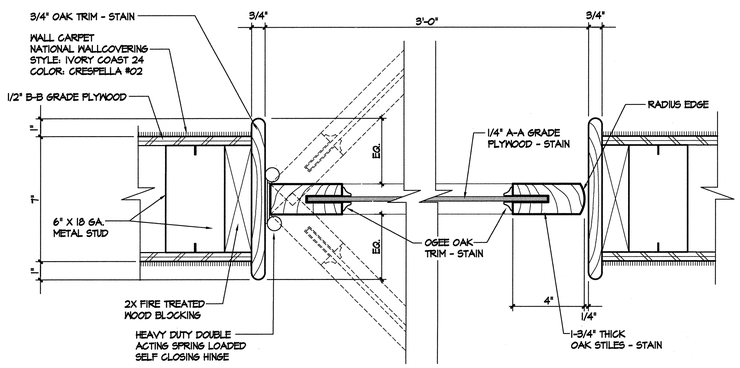

7 SECTION @ GATE
3" = 1'-0" 13020DT07.dwg

Renaissance Group
9700 village circle suite 100
lakeland, tn 38002
901.332.5533
fax: 901.332.5534

Revision	Description	Date
Revision	Description	Date
Revision	Description	Date
Revision	Description	Date

MODIFICATIONS TO
SHELBY COUNTY COURT
COURTROOM RENOVATION
201 POPLAR AVENUE
MEMPHIS, TENNESSEE

Sheet Title: DEMOLITION & FLOOR PLAN
Project No.: 13020
Drawing File No.: 13020A22
Drawn by: RGI
Date: 8/23/2013

Sheet No. A2.2

renaissance group

Kevin P. P:\13020\cd\drawings\G22\13020A22.dwg Sep 30, 2013 - 10:30am