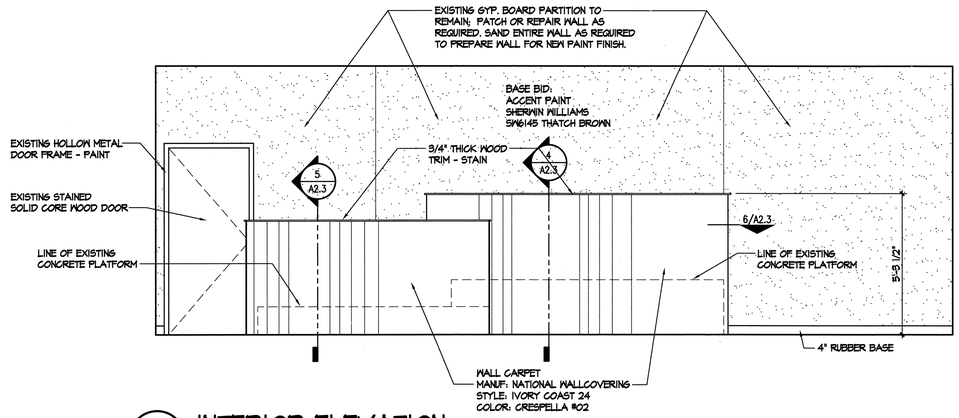

1 INTERIOR ELEVATION
3/8" = 1'-0" 13020

ADDITIVE ALTERNATE #1
PROVIDE A PRICE TO PROVIDE AND INSTALL WALLCOVERING IN LIEU OF ACCENT PAINT ON WALL
NATIONAL WALLCOVERING
VINYL WALL COVERING, CHARISMA
COLOR: Y46880CH

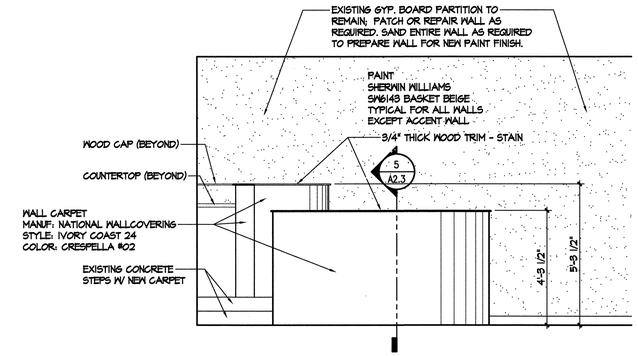

2 INTERIOR ELEVATION
3/8" = 1'-0" 13020

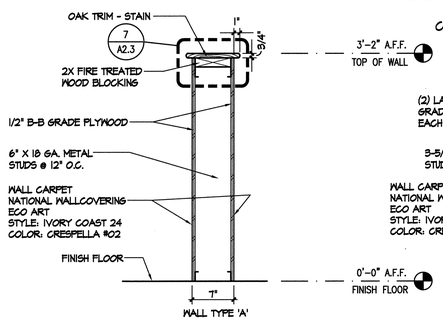

3 WALL SECTION
1" = 1'-0" 13020

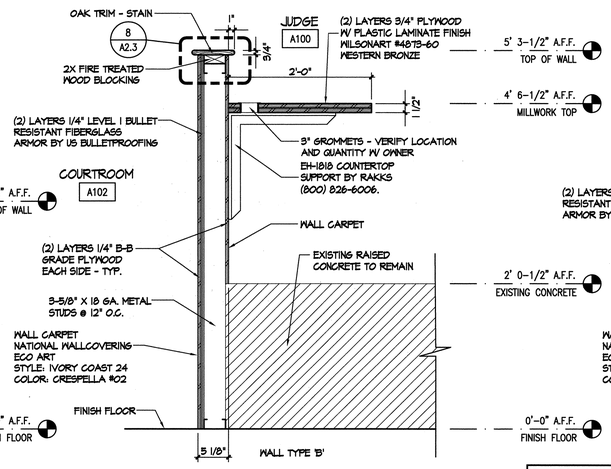

4 WALL SECTION
1" = 1'-0" 13020

PLASTIC LAMINATE COUNTERTOPS
MANUF: WILSONART
COLOR: #4873-60 WESTERN BRONZE

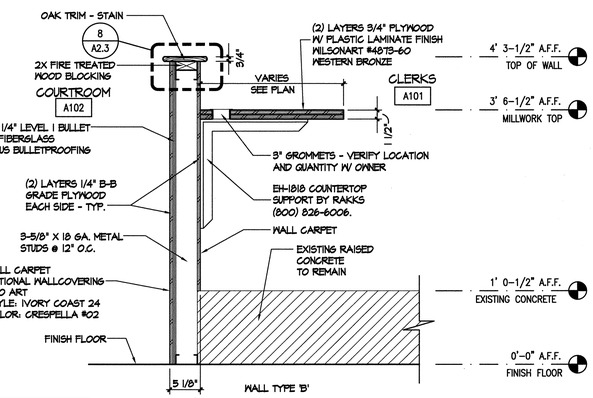

5 WALL SECTION
1" = 1'-0" 13020

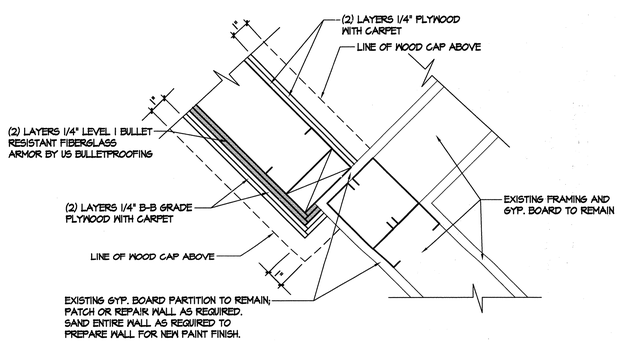

6 DETAIL @ LOW WALL
3" = 1'-0" 13020

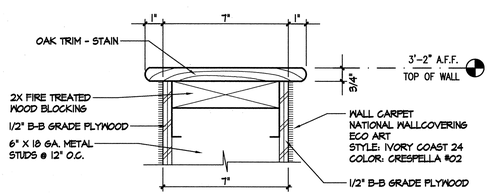

7 DETAIL @ WOOD CAP
3" = 1'-0" 13020DT07.dwg

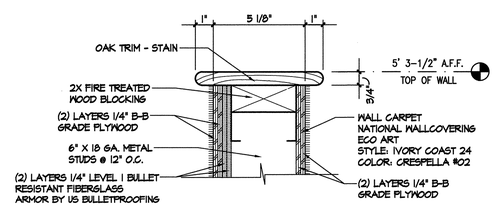

8 DETAIL @ WOOD CAP
3" = 1'-0" 13020DT07.dwg

Renaissance Group
9700 village circle suite 100
lakeland, tn 38002
901.332.5533
fax: 901.332.5534

MICHAEL E. TEPPER
REGISTERED ARCHITECT
9/27/2013
NO. 101065
STATE OF TENNESSEE

Revision	Description	Date
Revision	Description	Date
Revision	Description	Date
Revision	Description	Date

MODIFICATIONS TO
SHELBY COUNTY COURT
COURTROOM RENOVATION
201 POPLAR AVENUE
MEMPHIS, TENNESSEE

Sheet Title
INTERIOR ELEVATIONS / DETAILS

Project No.
13020

Drawing File No.
13020A23

Drawn by
RGI

Date
8/23/2013

Sheet No.
A2.3

r e n a i s s a n c e g r o u p
Kevin P. P:\13020\dwg\drawings\a23\13020A23.dwg Sep 30, 2013 - 10:44am