AIR HANDLING UNIT SCHEDULE

MARK	SUPPLY AIR CFM	MINIMUM FRESH AIR CFM	E.S.P. INCHES W.C.	SUPPLY FAN DATA	CHILLED WATER COOLING COIL DATA										HOT WATER RE-HEAT COIL DATA						FILTER DATA	REMARKS
					ENT AIR DB	ENT AIR WB	LVG AIR DB	LVG AIR WB	SENSIBLE BTU/HR	TOTAL BTU/HR	GPM AT 42°F EWT	A.P.D. INCHES W.C.	W.P.D. FT.	FACE VEL.	ENT. AIR	CAPACITY BTU/HR	GPM AT 180°F EWT	A.P.D. INCHES W.C.	W.P.D. FT.	FACE VEL.		
AHU-7	3,000	750	1.54	5 HP 460/3/60	79.08	66.3	51.0	50.9	92,810	136,960	14	1.446	6.6	563	49.35	45,910	6.4	0.217	1	491	2" THROWAWAY MERV 8	TRANE PERFORMANCE CLIMATE CHANGER SIZE 6 OR EQUIVALENT. PROVIDE WITH ANGLE FILTER BOX, & HORIZONTAL COIL MODULE. 1,348 LBS. NOTE 2.

NOTES:
1. TOTAL STATIC PRESSURE INCLUDES 0.587" FOR DIRTY FILTERS.
2. MOUNT HEATING COIL IN THE RE-HEAT POSITION. PROVIDE DEHUMIDIFICATION CYCLE AND SPACE MOUNTED HUMIDISTAT.
3. PROVIDE UNIT WITH DDC BACNET CONTROLLER AND INTERFACE WITH EXISTING BUILDING MANAGEMENT SYSTEM.

HVAC LEGEND

SYMBOL	DESCRIPTION	SYMBOL	DESCRIPTION
2224 SAD	FACE SIZE IN INCHES / AIR DISTRIBUTION DEVICE / NECK SIZE IN INCHES	FD	FIRE DAMPER
SA	SUPPLY AIR	T	ROOM TEMPERATURE SENSOR WITH SETPOINT ADJUSTMENT AND NIGHT OVERRIDE BUTTON (THERMOSTAT)
RA	RETURN AIR		CEILING SUPPLY AIR DIFFUSER
TA	TRANSFER AIR		CEILING RETURN OR EXHAUST AIR REGISTER
— —	EXISTING DUCT / PIPE TO REMAIN		MANUAL BALANCING DAMPER
//////	EXISTING DUCT / PIPE TO BE REMOVED	F/S	COMBINATION FIRE/SMOKE DAMPER (120 VOLTS)

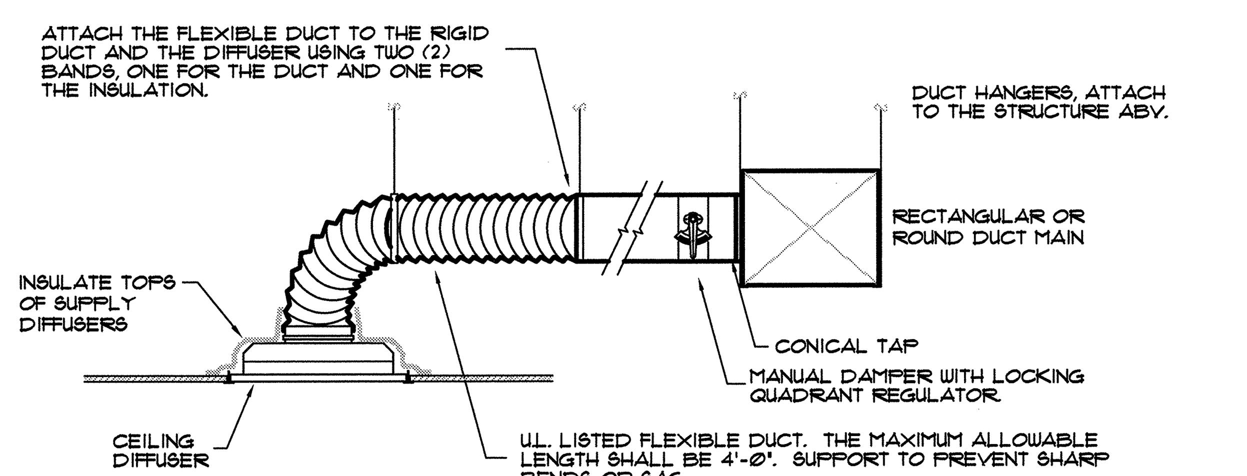

NOTE:
FLEXIBLE DUCT SHALL BE "FLEXMASTER" TYPE 5 WITH TRILAMINATE INNER FABRIC, MECHANICAL LOCK HELIX AND 1" THICK FIBERGLASS INSULATION WITH JACKET. NO EXCEPTIONS.

NOTE:
FLEXIBLE FLEXIBLE DUCT CONNECTIONS ARE NOT ALLOWED ON RETURN AIR OR EXHAUST AIR DUCTS. CONTRACTOR SHALL MAKE HARD DUCT CONNECTIONS TO EACH RETURN AIR AND EXHAUST AIR DISTRIBUTION DEVICE.

DIFFUSER CONNECTION DETAIL

NO SCALE

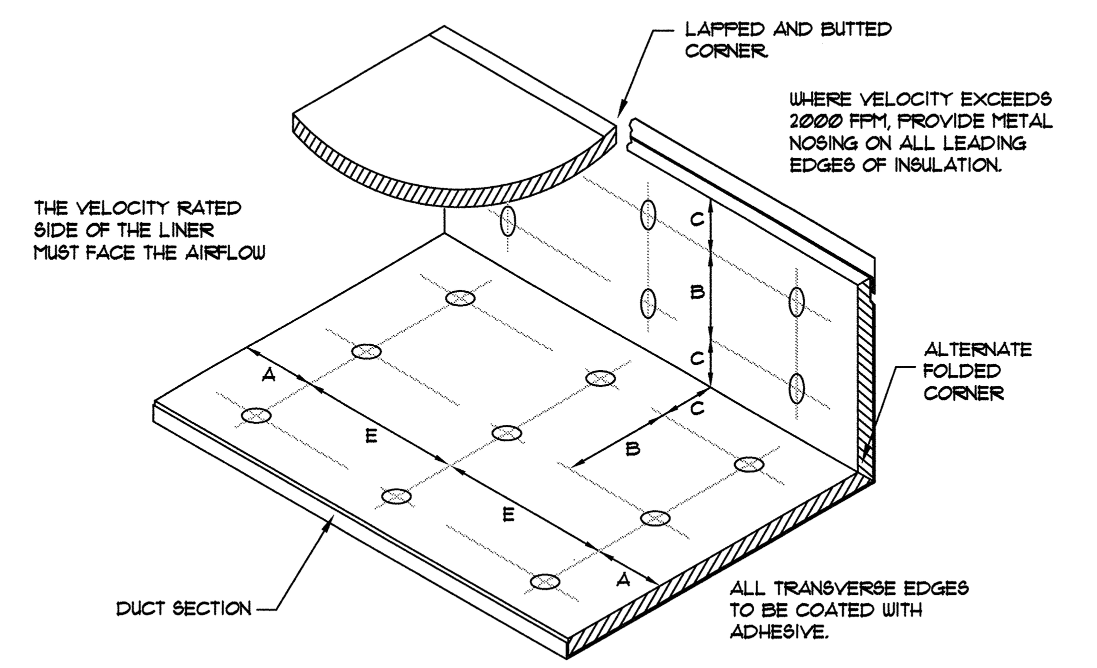

NOTES:
1. MAXIMUM ALLOWABLE SPACING FOR FASTENERS INDICATED. ACTUAL INTERVALS ARE APPROXIMATE. COMPLY WITH THE MANUFACTURER'S INSTALLATION INSTRUCTIONS.
2. LINER SHALL BE ADHERED TO THE DUCT WITH 100% COVERAGE OF ADHESIVE IN ADDITION TO THE MECHANICAL FASTENERS.
3. MECHANICAL FASTENER PINS SHALL BE THE WELDED ON TYPE WITH INTEGRAL HEAD OR PRESS-ON HEAD. MECHANICAL FASTENERS WHICH PIERCE THE DUCT OR GLUE/STICK-ON THE DUCT SHALL NOT BE USED.

VELOCITY	DIMENSIONS 'A'	'B'	'C'	'E'
0-2500 FPM	3"	12"	4"	18"
2501-6000 FPM	3"	6"	4"	16"

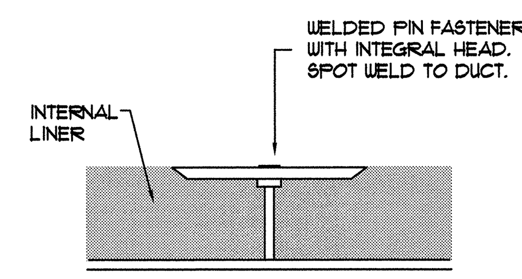

MECHANICAL FASTENER

INTERNAL DUCTLINER DETAIL

NO SCALE

DUCTLINR

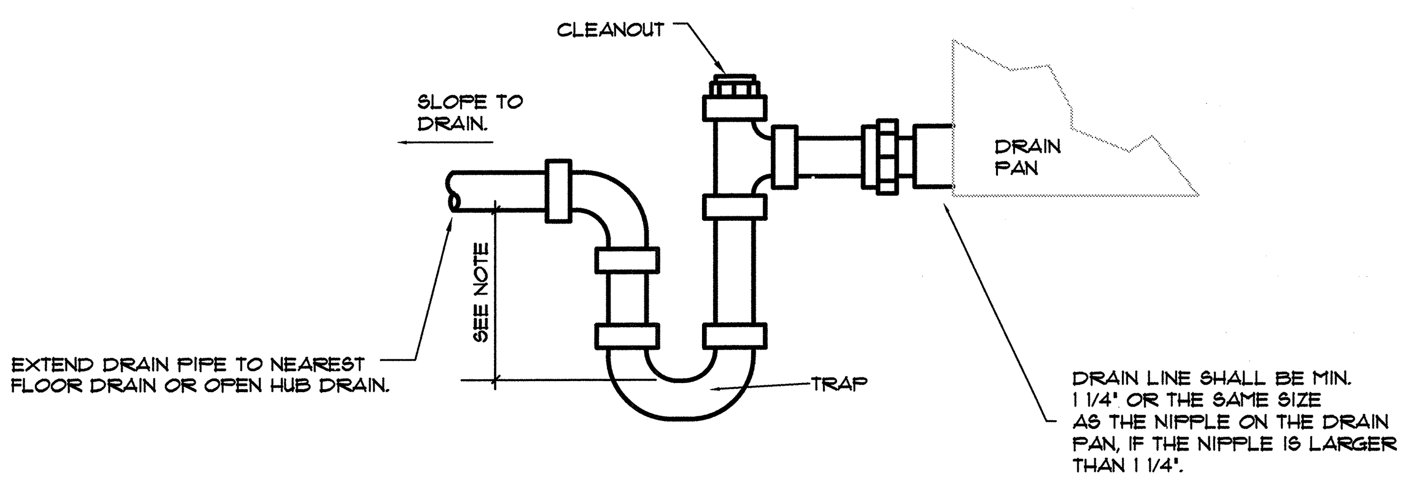

NOTE:
EQUAL TO AIR PRESSURE IN DRAIN DRAIN PAN PLUS 1/2" W.C.

CONDENSATE DRAIN DETAIL

NO SCALE

COND-DRN

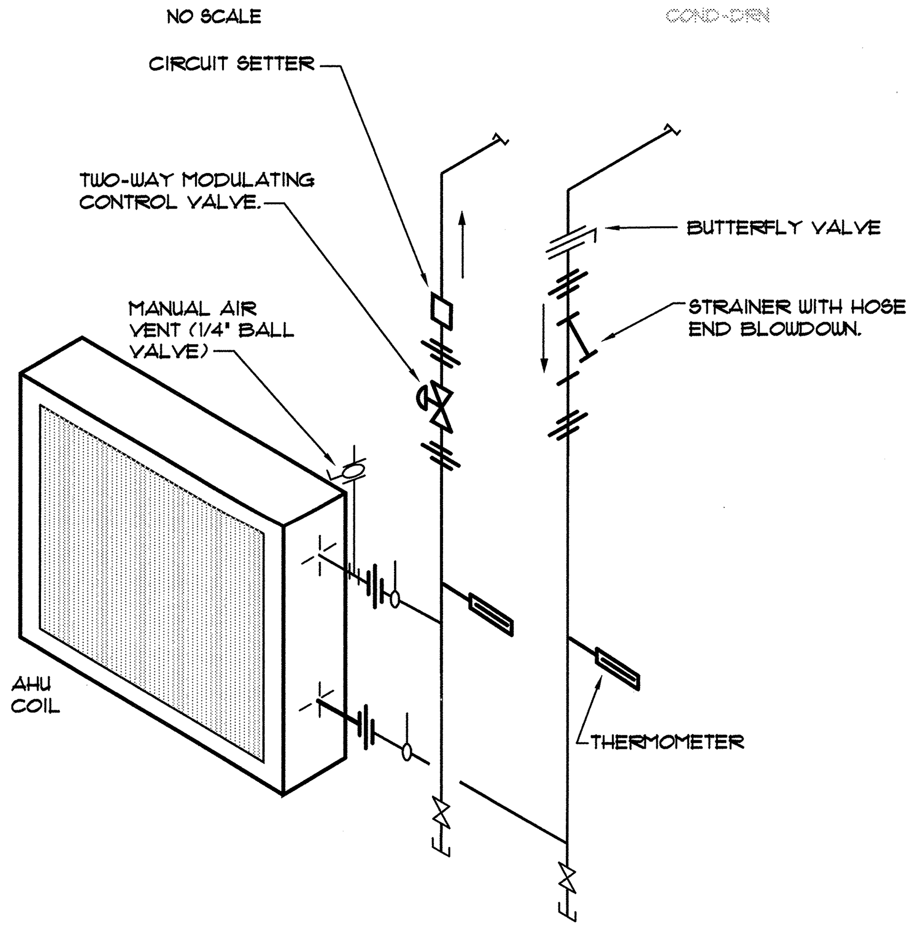

AHU HOT WATER AND CHILLED WATER COIL PIPING DETAIL

NO SCALE

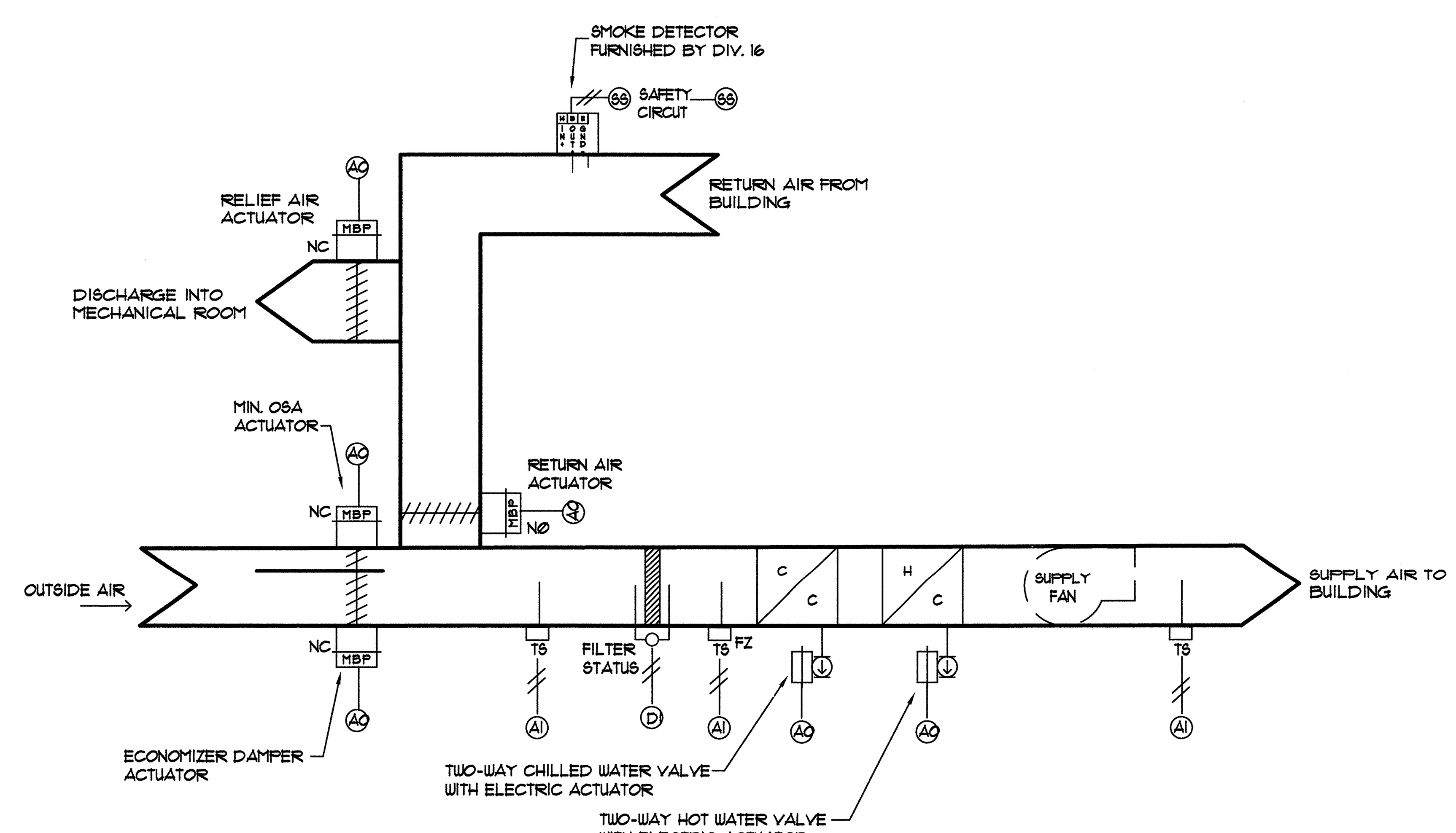

AIR HANDLING UNIT CONTROL SCHEMATIC

NO SCALE

HVAC SPECIFICATIONS

1. THE DRAWINGS ARE DIAGRAMMATIC AND SHOW GENERAL PIPE AND DUCT ROUTING FOR BIDDING PURPOSES ONLY. IT IS THE RESPONSIBILITY OF THE CONTRACTOR TO PREPARE DETAILED SHOP DRAWINGS AND TO CONFIRM SPACE ALLOCATIONS.
2. ALL WORK SHALL COMPLY WITH APPLICABLE FEDERAL, STATE, AND LOCAL LAWS, CODES, REGULATIONS, ETC., AND ALL AUTHORITIES HAVING JURISDICTION.
3. THE COMPLETED INSTALLATION SHALL BE IN ACCORDANCE WITH ALL UTILITY COMPANY REGULATIONS APPLICABLE INDUSTRY STANDARDS OF GOOD PRACTICE AND SAFETY AND, THE MANUFACTURER'S RECOMMENDATIONS FOR EQUIPMENT AND PRODUCT APPLICATION AND INSTALLATION. ALL EQUIPMENT SHALL BE INSTALLED IN STRICT ACCORDANCE WITH THE MANUFACTURER'S INSTRUCTIONS.
4. THE CONTRACTOR SHALL VISIT THE SITE, OBSERVE EXISTING CONDITIONS AND VERIFY THAT THE WORK CAN BE INSTALLED IN ACCORD WITH THE DESIGN AND THE ENGINEER'S RESTRICTIONS. THE ENTIRE INSTALLATION SHALL BE PERFORMED BY THE CONTRACTOR IN A FIRST CLASS WORKMANLIKE MANNER. VERIFY THE EXACT LOCATIONS OF ALL EXISTING UTILITIES PRIOR TO BEGINNING WORK.
5. THE CONTRACTOR SHALL OBTAIN AND PAY FOR ALL PERMITS AND DOCUMENTS AND PROVIDE ALL SERVICES RELATED OR ASSOCIATED WITH INSTALLATION OF THE WORK.
6. ALL WORK SHALL BE LOCATED TO AVOID CONFLICTS WITH OTHER WORK AND TO PROVIDE CONCEALMENT WITHIN THE BUILDING CONSTRUCTION WHILE MAINTAINING ADEQUATE CLEARANCE FOR THE CONSTRUCTION OF ARCHITECTURAL DESIGN, PROPER OPERATION AND SERVICE. REPORT ALL EXCEPTIONS TO THE ENGINEER PRIOR TO COMMENCING THE WORK.
7. PROVIDE ALL REQUIRED GENERAL CONSTRUCTION ACCESS PANELS TO ACCESS DAMPER ACTUATORS, VALVES, METERS AND ALL DEVICES REQUIRING ADJUSTMENTS AND SERVICE.
8. THE CONTRACTOR SHALL PROVIDE ALL CERTIFICATIONS THAT MATERIALS INSTALLED AND WORK PERFORMED HAVE BEEN ACCOMPLISHED IN ACCORD WITH THESE SPECIFICATIONS AND THE DRAWINGS.
9. SUBMIT PRODUCT DATA SHEETS AND SHOP DRAWINGS REPRESENTING THE WORK PROPOSED TO BE INSTALLED PRIOR TO THE ACTUAL INSTALLATION, FOR REVIEW AND COMMENT BY THE ENGINEER. SHOP DRAWINGS SHALL SHOW ALL EQUIPMENT, MAINTENANCE CLEARANCE, ETC.
10. ALL PENETRATIONS THRU RATED WALLS OR FLOORS SHALL BE SEALED WITH AN APPROVED U. L. LISTED FIREPROOFING TO MAINTAIN THE INTEGRITY OF THE WALL OR FLOOR.
11. PROVIDE PIPE MARKERS FOR ALL NEW CHILLED WATER AND HOT WATER PIPING. PIPE MARKERS SHALL BE INSTALLED AT NO GREATER THAN 15 FOOT INTERVALS AND SHALL INDICATE SERVICE AND PRESSURE (I.E. "HOT WATER SUPPLY").
12. DUCTWORK SHALL BE INSTALLED USING PRIME QUALITY G90 ZINC COATED STEEL SHEETS FABRICATED AND INSTALLED IN STRICT ACCORDANCE WITH SMACNA. ALL JOINTS AND SEAMS SHALL BE SEALED WITH HIGH PRESSURE DUCT SEALANT. PROVIDE TURNING VANES AT ALL ELBOWS AND OFFSETS. ALL DUCTWORK SHALL BE ROUTED CONCEALED AND SHALL BE SECURELY SUPPORTED FROM THE BUILDING STRUCTURAL ELEMENTS. ALL RECTANGULAR DUCT DIMENSIONS SHOWN ON PLANS ARE SHEET METAL DIMENSIONS. ALLOWANCE HAS BEEN MADE FOR INTERNAL DUCT LINER WHERE APPLICABLE.
13. INSULATE RECTANGULAR SUPPLY AND RETURN DUCTS AND PLENUMS WITH 1" THICK, 2 LB. DENSITY DUCTLINER WITH A "K" VALUE OF 0.24 AT 75 DEGREES F. SECURE DUCTLINER TO THE DUCT WITH 100% COVERAGE OF ADHESIVE PLUS MECHANICAL FASTENERS. SPACING OF MECHANICAL FASTENERS MUST NOT EXCEED THAT AS RECOMMENDED BY THE INSULATION MANUFACTURER.
14. INSULATE ALL CONCEALED ROUND DUCTWORK, THE TOPS OF ALL SUPPLY DIFFUSERS, AND PLENUMS WITH 2" THICK FIBERGLASS DUCTWRAP WITH FOIL SCRIM VAPOR BARRIER JACKET. BUTT AND TAPE ALL SEAMS TO FORM A CONTINUOUS VAPOR TIGHT SEAL.
15. HOT WATER AND CHILLED WATER PIPING SHALL BE ASTM B88, TYPEL HARD DRAWN COPPER TUBING WITH ASME B16.18 CAST BRONZE OF ASME B16.22 WROUGHT COPPER . JOINTS SHALL BE ASTM B32 SOLDER, GRADE 95TA. ELBOWS SHALL BE LONG RADIUS PATTERN.
16. BALL VALVES SHALL BE FULL PORT, THREE PIECE BOLTED BODY CONSTRUCTION WITH SOLDER END CONNECTIONS, STAINLESS STEEL BALL, TEFLON SEATS, LEVEL HANDLE WITH ESXTENSION TO CLEAR INSULATION. GRINNELL FIGURE 3810-SJ OR EQUIVALENT.
17. HOT WATER AND CHILLED WATER PIPE INSULATION SHALL BE 1" THICK GLASS FIBER WITH ALL SERVICE JACKET EQUIVALENT TO OWENS CORNING SSL II WITH SELF SEALING LAP. INSULATE FITTINGS WITH 1" THICK FIBERGLASS AND FINISH WITH PVC FITTING COVERS. PROTECT ALL INSULATION INSTALLED OUTSIDE BUILDING WITH 0.016" THICK CHILDERS ALUMINUM JACKET WTH SEAMS ON BOTTOM OF PIPE.
18. INSULATE CONDENSATE DRAIN PIPING FROM COOLING COILS WITH 1/2" THICK FLEXIBLE ELASTOMERIC CLOSED CELL INSULATION (ARMAFLEX) WITH ALL SEAMS AND JOINTS SEALED. PROTECT INSULATION INSTALLED OUTSIDE THE BUILDING WITH SYNTHETIC RESIN PROTECTIVE SEALANT EQUIVALENT TO ARMSTRONG ARMAFLEX TYPE WB SEALER.
19. FOR PURPOSE OF BALANCING HVAC SYSTEMS, THIS CONTRACTOR SHALL OBTAIN THE SERVICES OF AN INDEPENDENT TESTING AND BALANCING CONTRACTOR. THE TESTING AND BALANCING CONTRACTOR SHALL BE AABC OR NEBB CERTIFIED AND SHALL TEST AND BALANCE ALL AIR AND WATER SYSTEMS AND SHALL SUBMIT COPIES OF TEST AND BALANCE REPORTS TO THE ENGINEER FOR REVIEW. ALL COST FOR TESTING, ADJUSTING AND BALANCING SHALL BE PAID BY THE HVAC CONTRACTOR. SUBMIT COPIES OF BALANCE REPORTS TO THE ENGINEER WITHIN 10 DAYS OF SUBSTANTIAL COMPLETION OF THE MECHANICAL SYSTEM.
20. THIS CONTRACTOR SHALL WARRANTY ALL WORKMANSHIP AND MATERIALS FOR A PERIOD OF ONE YEAR AFTER FINAL ACCEPTANCE BY THE OWNER.
21. SLEEVE AND SEAL ALL DUCTWORK PENETRATIONS OF WALL, PARTITIONS, ETC. CAULK PENETRATIONS WITH 3M BRAND FIRE BARRIER CAULK.
22. LATERALLY BRACE AND SUPPORT ALL DUCTWORK AND PIPING PER LOCAL BUILDING CODE REQUIREMENTS.
23. A U.L. LISTED SMOKE DETECTOR, FURNISHED AND WIRED BY THE ELECTRICAL CONTRACTOR, SHALL BE LOCATED IN THE RETURN INTAKE OF EACH AIR HANDLING UNIT (BEFORE MIXING WITH OUTSIDE AIR) FOR FAN SHUTDOWN IN ACCORDANCE WITH CODE. REFER TO THE ELECTRICAL DRAWINGS FOR SMOKE DETECTOR. THIS CONTRACTOR SHALL INSTALL DETECTOR IN RETURN AIR DUCTWORK AND PROVIDE FAN SHUTDOWN WIRING IN ACCORDANCE WITH CODE.
24. THERMOSTATS FOR THE CONTROL OF HVAC SYSTEMS SHALL MATCH EXISTING WITHIN THE BUILDING.

SEQUENCE OF OPERATION
AIR HANDLING UNIT AHU-7

PROVIDE UNIT WITH DDC CONTROLLER AND INTERFACE CONTROLLER INTO EXISTING BUILDING MANAGEMENT SYSTEM AS INDICATED.

IN THE OCCUPIED MODE, THE AHU IS ENERGIZED, THE N.C. MINIMUM O.A. DAMPER SHALL OPEN. AFTER THE DAMPERS ARE OPENED, THE S.A. FAN IS STARTED AND SHALL RUN CONTINUOUSLY. THE N.O. CHILLED WATER CONTROL VALVE, N.O. HOT WATER CONTROL VALVE AND ECONOMIZER DAMPERS WILL MODULATE IN SEQUENCE TO MAINTAIN DISCHARGE AIR TEMPERATURE.

IN THE UNOCCUPIED MODE, THE SPACE THERMOSTATS SHALL BE SET BACK TO 63°F (ADJUSTABLE) DURING THE HEATING MODE AND UP TO 79°F (ADJUSTABLE) DURING THE COOLING MODE WITH NO REQUIREMENT FOR COOLING OR HEATING BETWEEN THESE TWO TEMPERATURES. THE SPACE THERMOSTAT SHALL CYCLE THE AHU FAN TO MAINTAIN THE UNOCCUPIED TEMPERATURE SET POINTS.

WHEN THE OUTDOOR AIR ENTHALPY IS LESS THAN THE RETURN AIR ENTHALPY THE ECONOMIZER CONTROLS SHALL BE ACTIVATED TO ALLOW THE SUPPLY AIR DUCT SENSOR TO MODULATE THE N.O. RETURN AIR DAMPER, N.C. ECONOMIZER DAMPER AND N.C. RELIEF AIR DAMPER TO MAINTAIN DISCHARGE AIR TEMPERATURE SET POINT. THE CHILLED WATER CONTROL VALVE SHALL MODULATE OPEN IF SET POINT CAN NOT BE MAINTAINED. A LOW LIMIT SENSOR IN THE MIXED AIR PLENUM SHALL OVERRIDE THE ECONOMIZER DAMPERS AND RETURN THEM TO NORMAL (CLOSED) POSITION IF THE MIXED AIR TEMPERATURE FALLS BELOW 45°F (ADJUSTABLE).

THE MINIMUM OUTSIDE AIR DAMPER SHALL BE OPEN WHENEVER THE SUPPLY AIR FAN IS OPERATING EXCEPT DAMPER SHALL BE CLOSED WHILE SYSTEM IS OPERATING IN THE MORNING WARM-UP MODE. THE MINIMUM O.A. DAMPER SHALL BE SHUT WHENEVER THE SUPPLY AIR FAN IS NOT OPERATING.

A LOW LIMIT TEMPERATURE SENSOR WITH ITS ELEMENT SERPENTINED SUCH THAT IT ADEQUATELY COVERS THE FACE OF THE COOLING COIL SHALL STOP THE UNIT AND SIGNAL AN ALARM TO THE FMS ANYTIME THE TEMPERATURE ENTERING THE CHW COIL DROPS BELOW 38°F. PROVIDE AS MANY LOW LIMIT THERMOSTATS AS ARE REQUIRED TO COMPLETELY COVER THE FACE OF THE COIL.

WHEN UNIT FAN IS OFF THE ASSOCIATED MOTOR OPERATED OSA DAMPER SHALL CLOSE AND THE HOT WATER AND CHILLED WATER VALVES SHALL OPEN TO FULL FLOW THROUGH THE COIL.

SMOKE DETECTOR LOCATED IN THE RETURN DUCT SHALL STOP THE UNIT AND SIGNAL THE FIRE ALARM SYSTEM ANYTIME PRODUCTS OF COMBUSTION ARE DETECTED IN THEIR RESPECTIVE AIR STEAM. DETECTORS ARE FURNISHED AND WIRED BY DIVISION 16000 AND WIRED FOR FAN SHUTDOWN BY THIS SECTION.

THE BMS SHALL MONITOR THE STATUS OF FILTERS AT AIR HANDLING UNIT THROUGH PHOTOHELIC PRESSURE GAGE ON FILTER HOUSING. INITIATE AN ALARM AT BMS WHEN FILTER PRESSURE DROP EXCEEDS SETPOINT.

THE BMS SHALL MONITOR AIR FLOW, SUPPLY AIR TEMPERATURE, RETURN AIR TEMPERATURE, MIXED AIR TEMPERATURE, OUTDOOR TEMPERATURE & RH, CONTROL VALVE POSITION (HEATING AND CHILLED WATER), DAMPER STATUS (MIN. OSA, ECONOMIZER, RELIEF AND RETURN) AND FILTER STATUS.

AIR DISTRIBUTION SCHEDULE

SAD — SUPPLY AIR DIFFUSER: 3 CONE LOUVERED FACE CEILING SUPPLY AIR DIFFUSER, STEEL CONSTRUCTION WITH 24x24 LAY-IN T-BAR FRAME OR 12x12 / 24x24 FRAME FOR SURFACE MOUNTING, ROUND NECK AND OPPOSED BLADE DAMPER. NAILOR RNS SERIES OR EQUIVALENT.

RAR — RETURN AIR REGISTER: ALUMINUM EGGCRATE WITH FULL PERIMETER LAY-IN OR SURFACE MOUNTING FRAME AS APPLICABLE AND OPPOSED BLADE DAMPER. NAILOR 4260 SERIES OR EQUIVALENT.

TAG — TRANSFER AIR GRILLE: ALUMINUM EGGCRATE SAME AS RAR ABOVE EXCEPT WITHOUT DAMPER.

AIR DISTRIBUTION NOTES:

1. THE FINISH COLORS OF ALL AIR DISTRIBUTION DEVICES SHALL BE WHITE.
2. COORDINATE THE EXACT LOCATIONS OF ALL CEILING MOUNTED AIR DISTRIBUTION DEVICES WITH THE REFLECTED CEILING PLAN, CEILING GRID LAYOUT AND ELECTRICAL LIGHTING LAYOUT PRIOR TO BEGINNING ANY WORK.
3. THE FRAME STYLE OF ALL CEILING MOUNTED DEVICES SHALL MATCH THE TYPE OF CEILING WHERE SHOWN TO BE INSTALLED.
4. ALL AIR DISTRIBUTION DEVICES - EXCEPT FOR SIDEWALL REGISTERS AT FIRE DAMPERS - SHALL BE FURNISHED WITH CONCEALED FASTENING FRAMES SO THAT NO FASTENERS ARE VISIBLE. SIDEWALL REGISTERS AT FIRE DAMPERS SHALL BE SECURED TO TURNED-OUT FLANGE OF 10 GA. WALL SLEEVE AS FIRE DAMPERS SHALL BE SECURED TO TURNED-OUT FLANGE OF 10 GA. DETAILED ON SHEET M3.1.
5. PROVIDE ALL CEILING MOUNTED AIR DISTRIBUTION DEVICES WITH EARTHQUAKE TABS. INDEPENDENTLY SUPPORT CEILING MOUNTED AIR DISTRIBUTION DEVICES FROM STRUCTURE ABOVE.

BCM
BARHAM / CAIN / MYNATT
incorporated
CONSULTING ENGINEERS
1015 Cordova Station Road Cordova, Tennessee 38018
Phone: (901) 685-2371 Fax: (901) 682-0233
E-mail: barham@barhamcainmynatt.com

WILLIAM M. CAIN — REGISTERED ENGINEER — AGRICULTURE — COMMERCE — No. 19585 — STATE OF TENNESSEE — 9-16-13

Revision	Description	Date
Revision	Description	Date
Revision	Description	Date
Revision	Description	Date

NEW COURTROOM LL188
SHELBY COUNTY JUSTICE CENTER
201 POPLAR AVENUE
MEMPHIS, TENNESSEE

Sheet Title: SCHEDULES AND DETAILS - HVAC
Project No.: 13009
Drawing File No.: 13009-hvac
Drawn by: WMC
Date: 09-16-2013
Sheet No.: M2.1