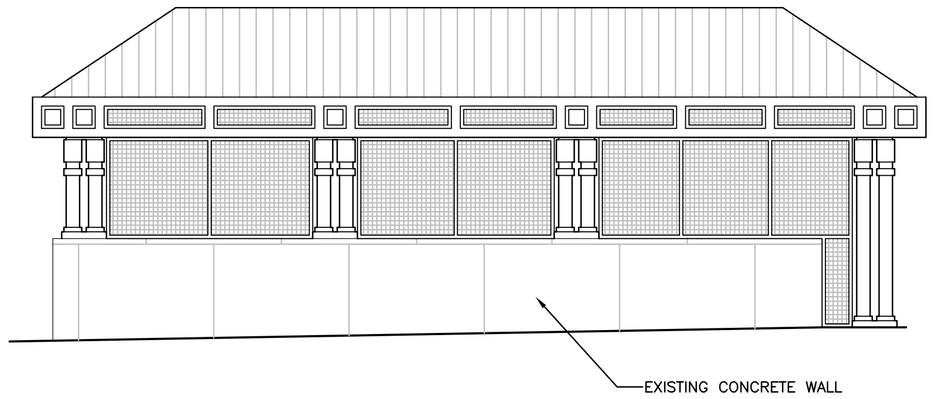

1 SOUTH ELEVATION
SCALE: 1/4" = 1'-0"

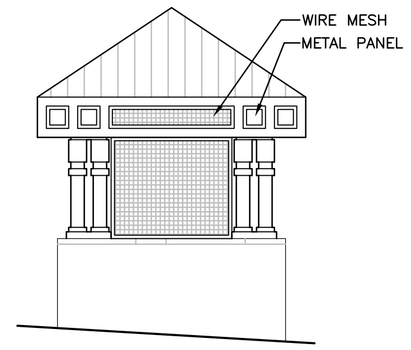

2 WEST ELEV.
SCALE: 1/4" = 1'-0"

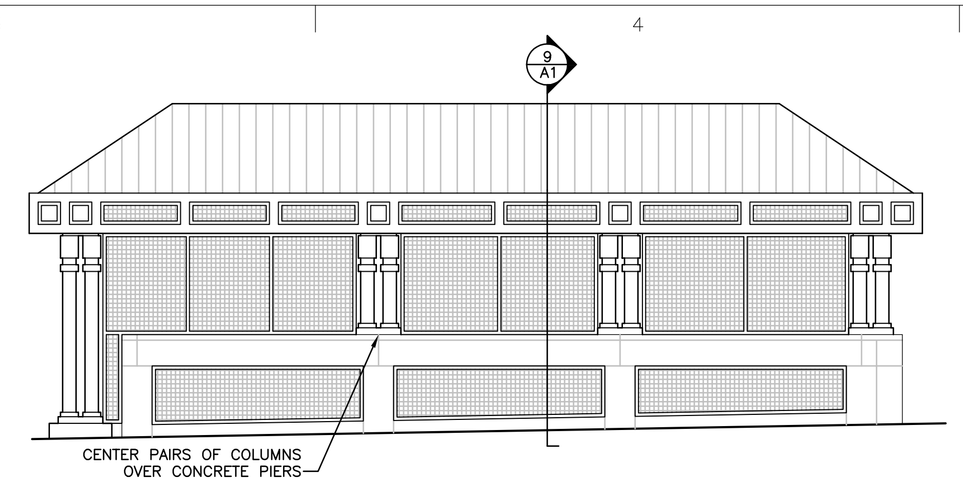

3 NORTH ELEVATION
SCALE: 1/4" = 1'-0"

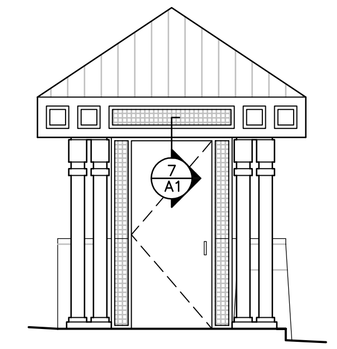

4 EAST ELEV.
SCALE: 1/4" = 1'-0"

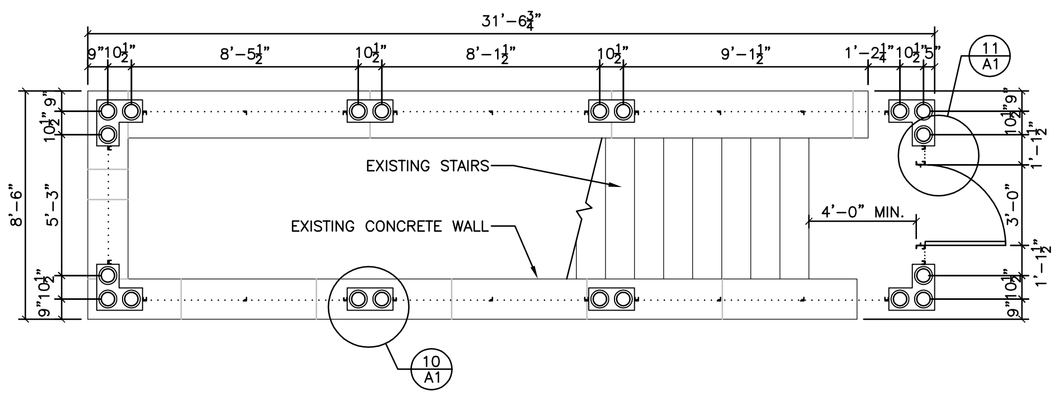

5 FLOOR PLAN
SCALE: 1/4" = 1'-0"

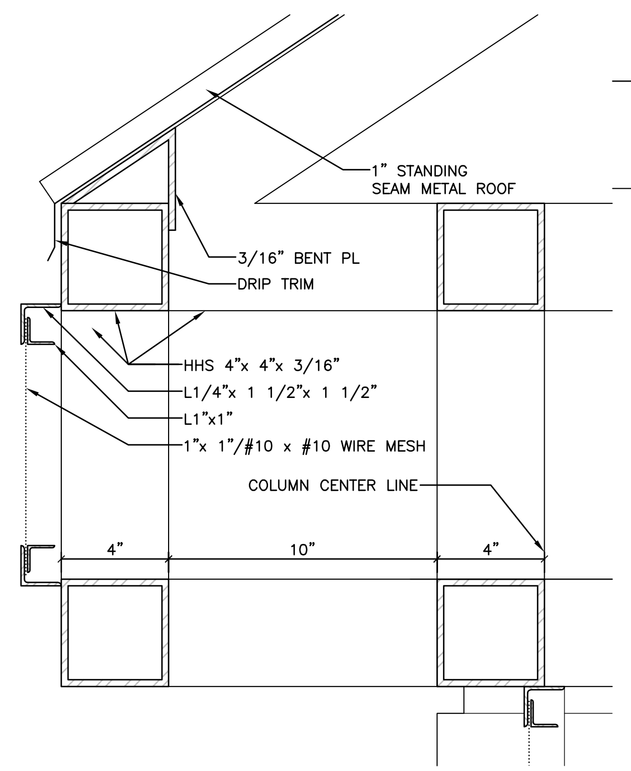

6 EAVES DETAIL
SCALE: 3" = 1'-0"

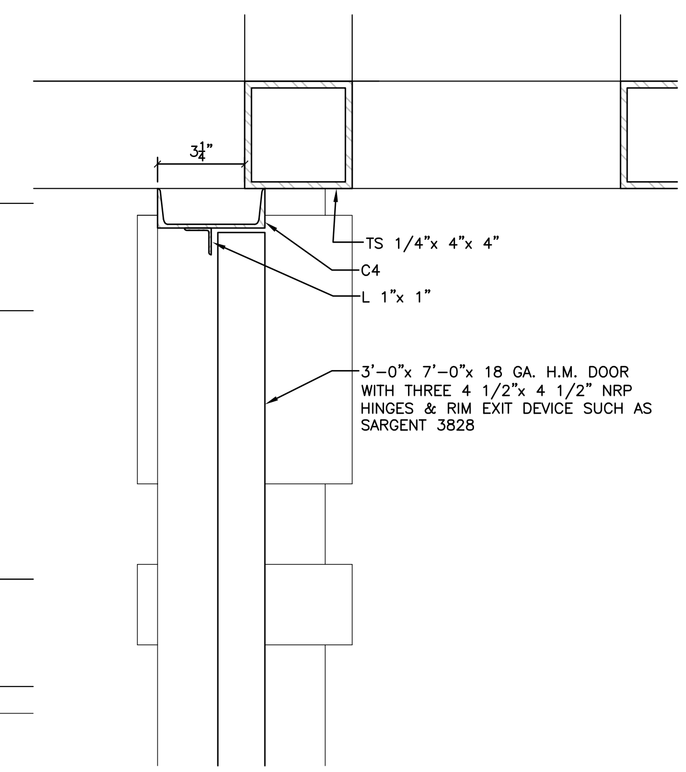

7 DOOR HEAD
SCALE: 3" = 1'-0"

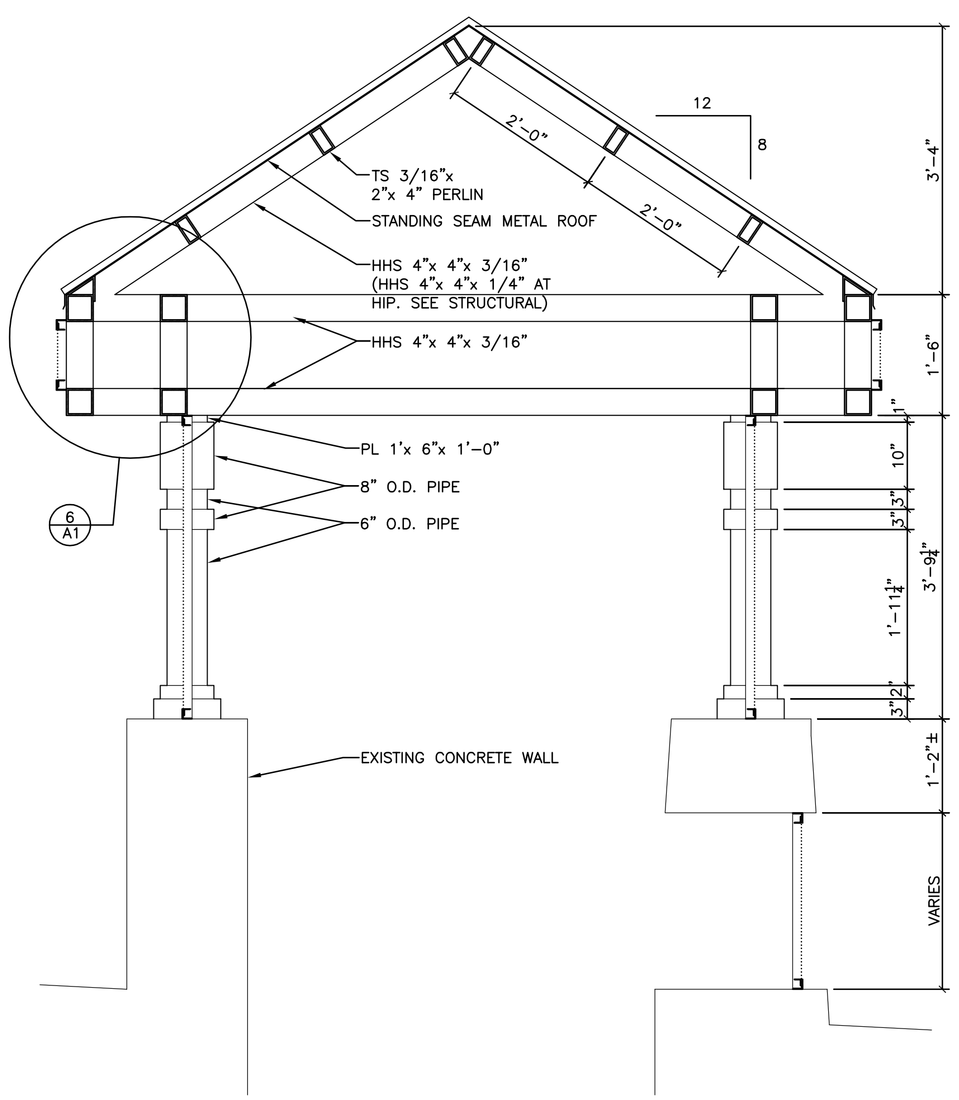

9 SECTION
SCALE: 3/4" = 1'-0"

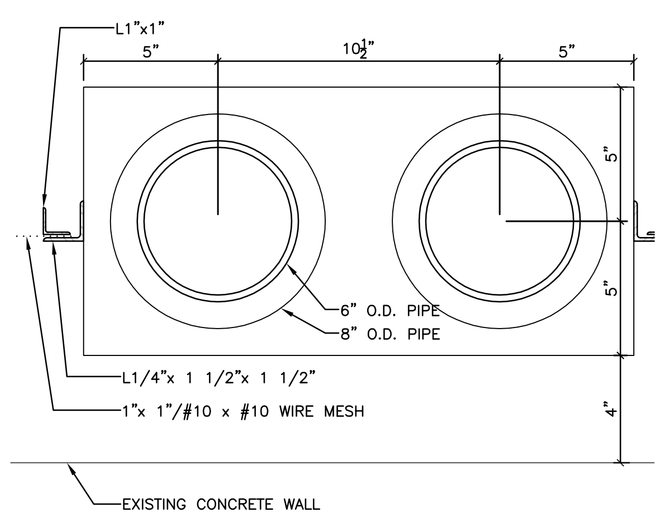

10 PEDESTAL DETAIL
SCALE: 3" = 1'-0"

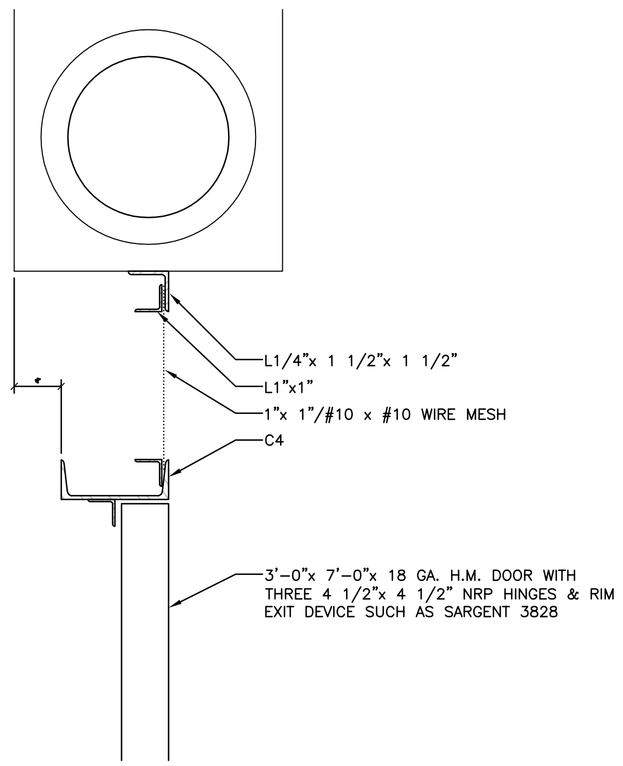

11 DOOR JAMB DETAIL
SCALE: 3" = 1'-0"

BIGHAM
ROOF
CONSULTING

9160 Hwy 64 Ste 12 PMB 135, Lakeland, TN 38002-8094 •
(901)606-8254 • fax (901)465-8039 • jbigham@bighamroof.com

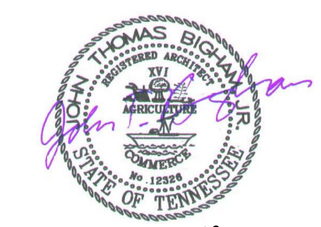

11-16-10

CIVIC CENTER STAIR COVER

SHELBY COUNTY, TENNESSEE

MARK	DATE	DESCRIPTION
	11.15.10	

SCALE	AS NOTED
PROJECT NO:	09022
CAD DWG FILE:	.DWG
DRAWN BY:	JTB
CHECKED BY:	JTB

SHEET TITLE
Plan & Elevations

A1