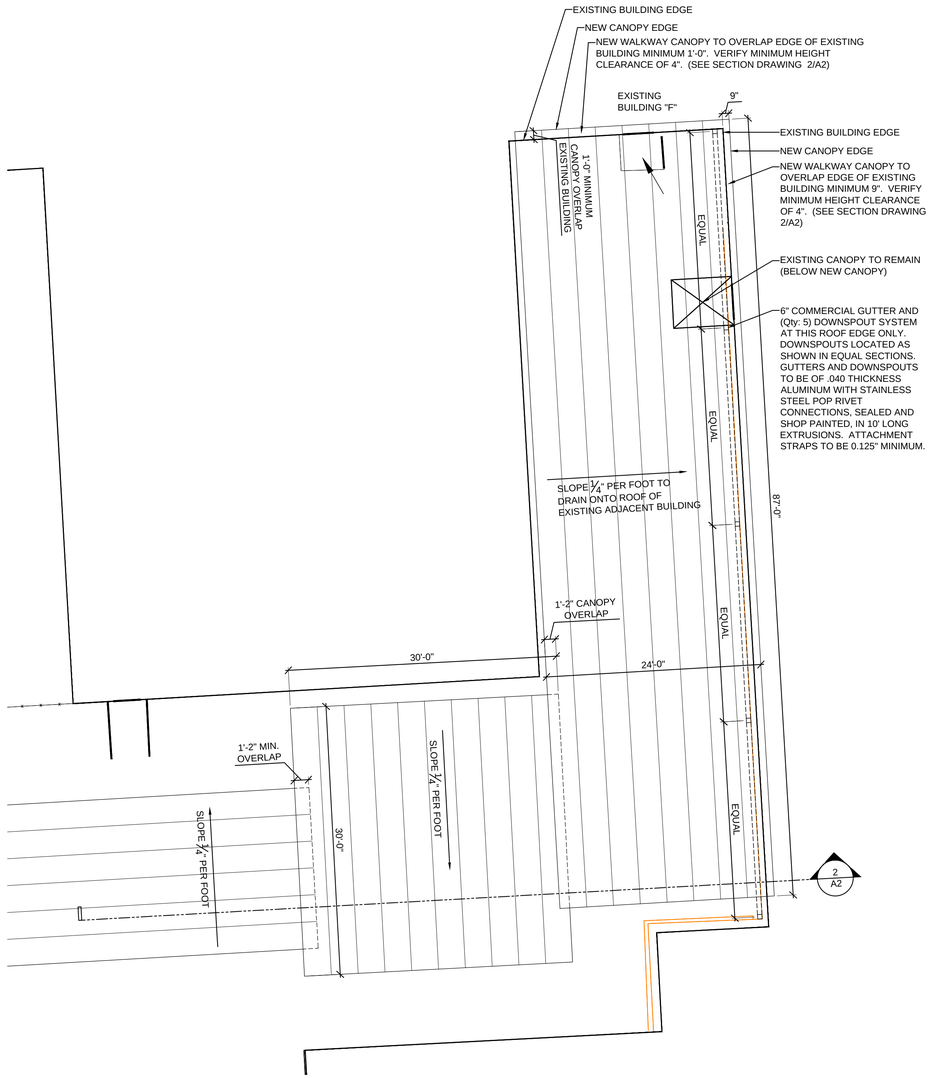

1 / A2 PARTIAL ENLARGED PLAN

1/8"=1'-0"

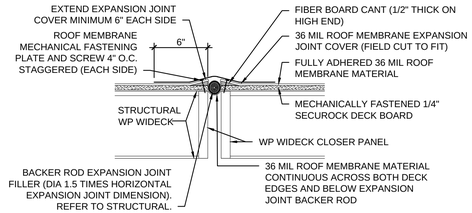

3 / A2 EXPANSION JOINT DETAIL (TYPICAL)

1 1/2"=1'-0"

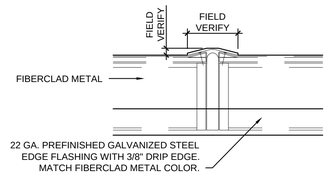

4 / A2 DECK FASCIA PROFILE AT EXPANSION JOINT (TYPICAL)

1 1/2"=1'-0"

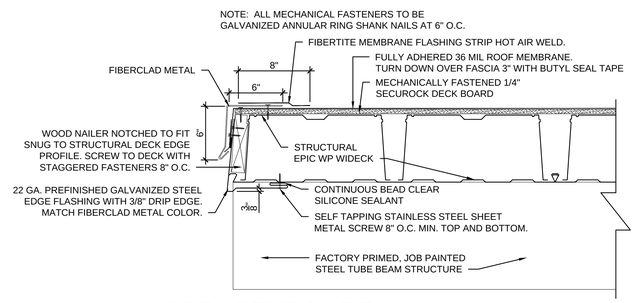

5 / A2 STRUCTURAL DECK EDGE CONDITION DETAIL (TYPICAL)

1 1/2"=1'-0"

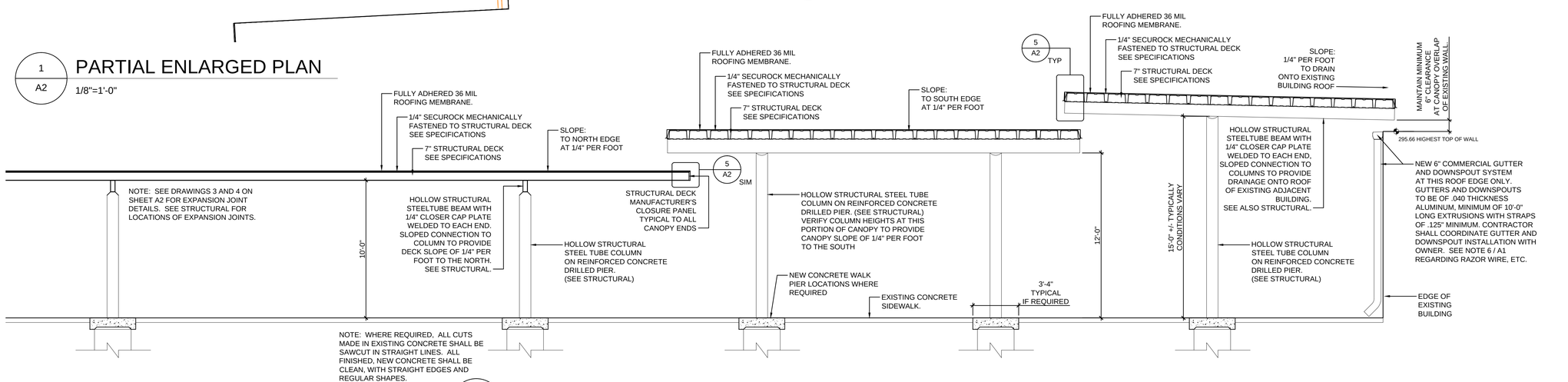

2 / A2 PARTIAL SECTION THROUGH CANOPY

1/4"=1'-0"

revisions	
no.	date
1	REISSUED 6/12/2015

seal

john pruett architects
1869 madison ave.
memphis, tn 38104
(901) 721-9062

pruettarchitects@bellsouth.net
www.pruettarchitects.com

Shelby County Department of Corrections

WALKWAY CANOPY

1045 Mullins Station Road, Memphis, TN 38134

BID SET

sheet name

PARTIAL ENLARGED PLAN, SECTION AND DETAILS

date

04/28/2015

A2