TENNESSEE D.O.T.
DESIGN DIVISION
FILE NO.

CONST. NO.		
PROJECT NO.	YEAR	SHEET NO.
79054-3407-04	2013	45

REVISIONS

NO.	DATE	BY	BRIEF DESCRIPTION

LEGEND
I = INTEGRAL
F = FIXED

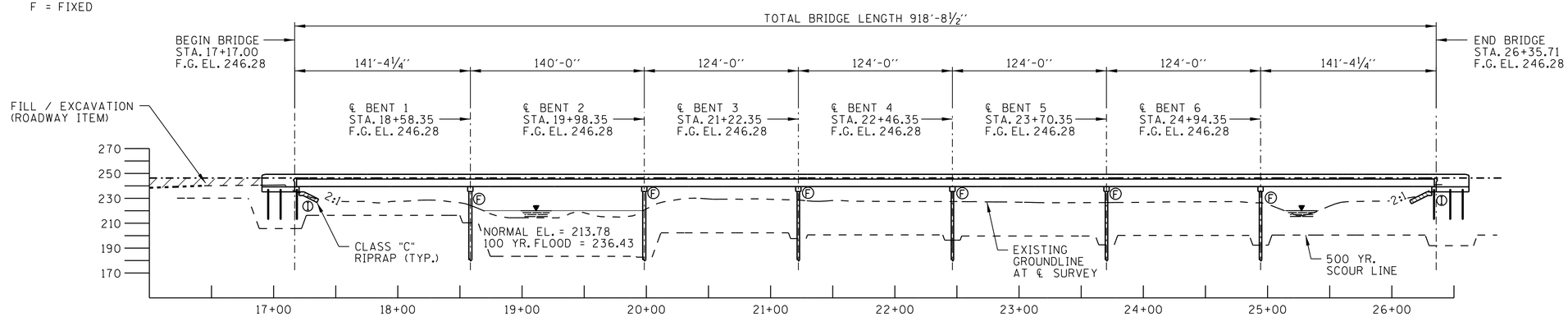

ELEVATION
(SCALE 1"=50')

NOTE:
EXISTING BRIDGE NO. 79S81030001 WHICH CONSISTS OF 24 SPANS OF CONTINUOUS STEEL GIRDERS WITH COMPOSITE CONCRETE DECK SLAB TO BE REMOVED TO NATURAL GROUND FROM STA. 17+13 TO STA. 26+34. EXISTING STRUCTURE IS 30'-10" OUT TO OUT. EXISTING BRIDGE LENGTH IS 921'-0".

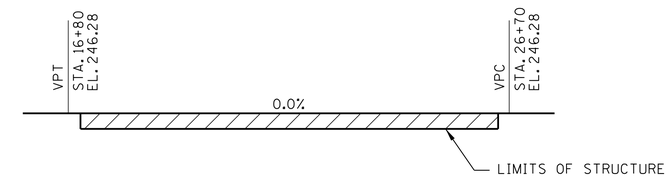

GRADE SKETCH
RALEIGH-MILLINGTON ROAD

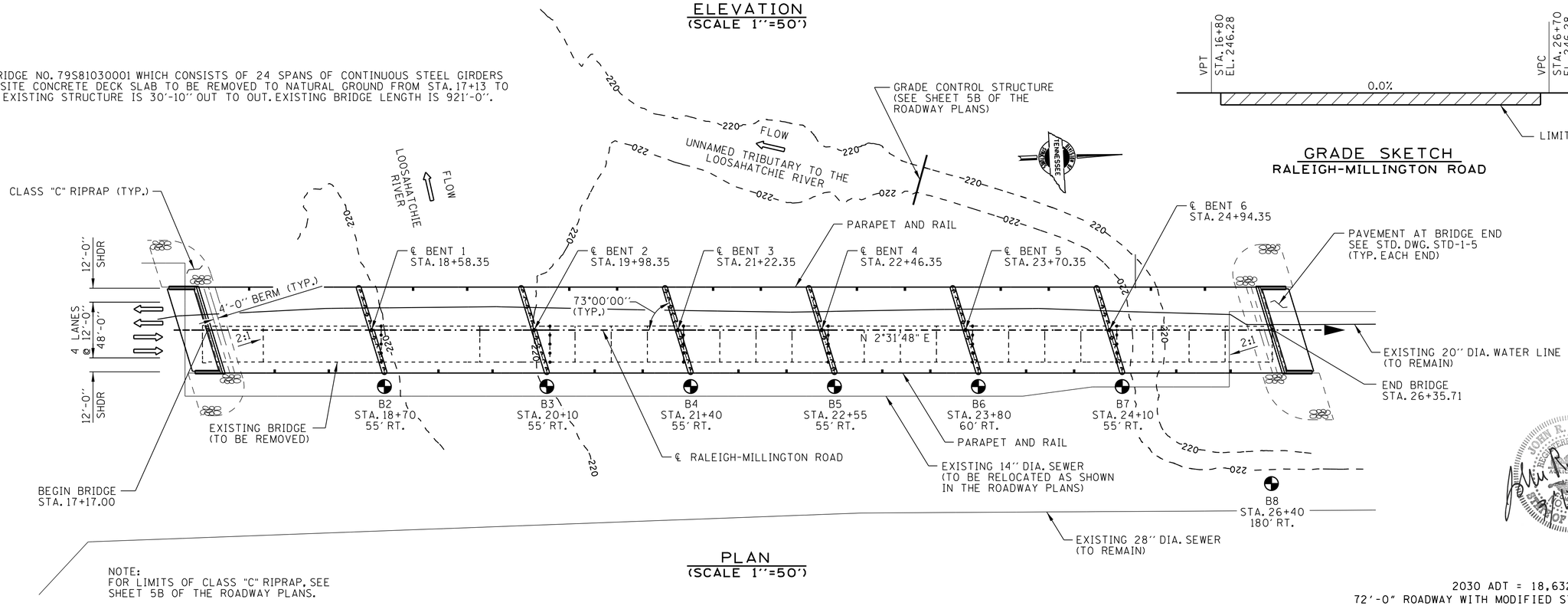

NOTE:
FOR LIMITS OF CLASS "C" RIPRAP, SEE SHEET 5B OF THE ROADWAY PLANS.

PLAN
(SCALE 1"=50')

2030 ADT = 18,632
72'-0" ROADWAY WITH MODIFIED STD-1-1SS PARAPET
DESIGN SPEED = 50 MPH

HYDRAULIC DATA

HEADWATER CONDITION	
DRAINAGE AREA	554.03 SQ. MILES
FEMA PUBLISHED FLOW (100 YR.)	54,300 CFS
DESIGN DISCHARGE (100 YR.)	55,500 CFS
AREA PROVIDED BELOW EL. 236.43	9994.67 SQ. FT.
100 YR. VELOCITY (MAX.)	8 FT./SEC.
ROADWAY OVERTOPPING EL.	239.17
MAXIMUM SPREAD ON DECK	12 FT.
BACKWATER CONDITION	
100 YR. BACKWATER EL	236.43

▪ DENOTES REQUIRED PARAPET DRAIN PER STD. DWG. STD-1-2SS.

DRAIN LOCATION TABLE

SPAN NO.	1	2	3	4	5	6	7
WEST SIDE OF BRIDGE	17+52.78 17+99.55	18+94.02 19+40.68	20+28.68 20+70.01	21+52.68 21+94.02	22+76.68 23+18.02	24+00.68 24+42.01	25+30.13 25+76.90
EAST SIDE OF BRIDGE	17+74.78 18+21.55	19+16.02 19+62.68	20+50.68 20+92.01	21+74.68 22+16.02	22+98.68 23+40.02	24+22.68 24+64.01	25+52.13 25+98.90

DESIGNED BY	JOHN CROSSLIN	DATE	5/2012
DRAWN BY	MIKE BUCKNER	DATE	5/2012
SUPERVISED BY	ERIC NELSON	DATE	5/2012
CHECKED BY	BEN SHEALY	DATE	5/2012

JOHN R. CROSSLIN
REGISTERED ENGINEER
No. 106443
STATE OF TENNESSEE
2/6/2013

STATE OF TENNESSEE
DEPARTMENT OF TRANSPORTATION

LAYOUT OF BRIDGE
RALEIGH-MILLINGTON ROAD
OVER THE LOOSAHATCHIE RIVER
BRIDGE I.D. NO. 79S81030001
STATION 21+76.35
LOG MILE 3.88
SHELBY COUNTY
2013

U-46-98

2/6/2013 9:52:48 AM
G:\60220947 Raleigh-Millington Bridge\Cad\BridgeLayout.dgn

TENNESSEE D.O.T.
DESIGN DIVISION
FILE NO.

CONST. NO. _____

PROJECT NO.	YEAR	SHEET NO.
79054-3407-04	2013	46

REVISIONS

NO.	DATE	BY	BRIEF DESCRIPTION

INDEX OF DRAWINGS

DESCRIPTION	DWG. NO.	LAST REV. DATE
LAYOUT OF BRIDGE	U-46-98	--------
INDEX OF DRAWINGS	U-46-99	--------
GENERAL NOTES	U-46-100	--------
ESTIMATED QUANTITIES	U-46-101	--------
FOUNDATION DATA	U-46-102	--------
PHASING SEQUENCE I	U-46-103	--------
PHASING SEQUENCE II	U-46-104	--------
SUPERSTRUCTURE - TYPICAL SECTION I	U-46-105	--------
SUPERSTRUCTURE - TYPICAL SECTION II	U-46-106	--------
SUPERSTRUCTURE - FRAMING PLAN I	U-46-107	--------
SUPERSTRUCTURE - FRAMING PLAN II	U-46-108	--------
SUPERSTRUCTURE - SLAB PLAN I	U-46-109	--------
SUPERSTRUCTURE - SLAB PLAN II	U-46-110	--------
SUPERSTRUCTURE - MAIN REINFORCING PLAN I	U-46-111	--------
SUPERSTRUCTURE - MAIN REINFORCING PLAN II	U-46-112	--------
FINISH GRADE ELEVATIONS	U-46-113	--------
PRESTRESSED BEAM DETAILS - SPANS 3,4,5 & 6	U-46-114	--------
PRESTRESSED BEAM DETAILS - SPANS 1,2 & 7	U-46-115	--------
ABUTMENT 1 - LAYOUT	U-46-116	--------
ABUTMENT 2 - LAYOUT	U-46-117	--------
ABUTMENT DETAILS I	U-46-118	--------
ABUTMENT DETAILS II	U-46-119	--------
ABUTMENT DETAILS III	U-46-120	--------
BENTS 1-6 - LAYOUT	U-46-121	--------
BENTS 1-6 - DETAILS	U-46-122	--------
WROUGHT IRON RAILING DETAILS	U-46-123	--------
FINAL FOUNDATION DATA I	U-46-124	--------
FINAL FOUNDATION DATA II	U-46-125	--------
BILL OF STEEL I	U-46-126	--------
BILL OF STEEL II	U-46-127	--------
BILL OF STEEL III	U-46-128	--------

LIST OF STANDARD DRAWINGS

DESCRIPTION	DWG. NO.	LAST REV. DATE
BRIDGE RAILING SINGLE SLOPE CONCRETE PARAPET	STD-1-1SS	06/01/2011 ▲
STEEL SLIDER PLATE ASSEMBLIES FOR SINGLE SLOPE CONCRETE PARAPET AND BRIDGE DECK DRAIN DETAILS	STD-1-2SS	2006
REINFORCED CONCRETE PAVEMENT AT BRIDGE ENDS	STD-1-5	06/01/2011
BRIDGE MOUNTED INTERCONNECTED PORTABLE BARRIER RAIL	STD-2-1	11/01/2010
STANDARD PILE DETAILS	STD-5-2	04/08/2005
STANDARD SEISMIC DETAILS	STD-6-1	11/01/2010
STANDARD SEISMIC DETAILS	STD-6-2	11/07/1994
STANDARD REINFORCING BAR SUPPORT DETAILS FOR CONCRETE SLABS	STD-9-1	10/07/2008
MISCELLANEOUS ABUTMENT AND DRAINAGE DETAILS	STD-10-1	04/08/2005
STANDARD DETAILS AND INTERMEDIATE DIAPHRAGM DETAILS FOR BULB-TEE BEAMS	STD-14-1	10/15/2008

▲ DENOTES BRIDGE RAIL TO BE MODIFIED AS PER DRAWING U-46-123.

2030 ADT = 18,632
72'-0" ROADWAY WITH MODIFIED STD-1-1SS PARAPET
DESIGN SPEED = 50 MPH

STATE OF TENNESSEE
DEPARTMENT OF TRANSPORTATION

INDEX OF DRAWINGS
RALEIGH-MILLINGTON ROAD
OVER THE LOOSAHATCHIE RIVER
BRIDGE I.D. NO. 79S81030001
STATION 21+76.35
LOG MILE 3.88
SHELBY COUNTY
2013

DESIGNED BY	JOHN CROSSLIN	DATE	5/2012
DRAWN BY	MIKE BUCKNER	DATE	5/2012
SUPERVISED BY	ERIC NELSON	DATE	5/2012
CHECKED BY	BEN SHEALY	DATE	5/2012

2/5/2013 12:03:16 PM
G:\60220947 Raleigh-Millington Bridge\Cad\Index.dgn

TENNESSEE D.O.T.
DESIGN DIVISION
FILE NO.

CONST. NO.		
PROJECT NO.	YEAR	SHEET NO.
79054-3407-04	2013	47

REVISIONS

NO.	DATE	BY	BRIEF DESCRIPTION

GENERAL NOTES

SPECIFICATIONS: STANDARD ROAD AND BRIDGE SPECIFICATIONS OF THE TENNESSEE DEPARTMENT OF TRANSPORTATION (MARCH 1, 2006 EDITION).

LOADING: HL-93 WITH 35 PSF FOR FUTURE OVERLAY.

DESIGN SPECIFICATIONS: AASHTO LRFD BRIDGE DESIGN SPECIFICATIONS 2010 EDITION WITH ADDENDA. SEISMIC ZONE 3 WITH As=0.493; SDs = 0.912; SD1=0.394.

CONCRETE: TO BE CLASS "A" (CAST IN PLACE) f'c = 3000 PSI EXCEPT AS NOTED OTHERWISE.

CLASS "D" CONCRETE FOR BRIDGE DECKS SHALL BE IN ACCORDANCE WITH SECTION 604 OF THE STANDARD SPECIFICATIONS. (MIN. f'c = 4000 PSI)

BRIDGE DECK SURFACE FINISH: TO BE IN ACCORDANCE WITH NOTE "C" IN ARTICLE 604.22 OF THE STANDARD SPECIFICATIONS.

BRIDGE DECK FORMS: BRIDGE DECK FORMS FOR CONCRETE DECKS SHALL BE CONSTRUCTED USING EITHER REMOVABLE FORMS OR PERMANENT FORMS. PERMANENT FORMS SHALL BE REMAIN-IN-PLACE STEEL. PRECAST PRESTRESSED CONCRETE PANELS WILL NOT BE PERMITTED. FORMS SHALL BE ATTACHED BY MEANS OTHER THAN WELDING TO MAIN STRUCTURAL MEMBERS OR REINFORCING STEEL. TEMPORARY ERECTION DIAPHRAGMS MUST BE USED AT THE ENDS OF PRECAST CONCRETE GIRDERS WHERE END DIAPHRAGMS, SUPPORT DIAPHRAGMS, OR ABUTMENT BACKWALLS ARE TO BE POURED CONCURRENTLY WITH THE DECK AND SHALL BE PROVIDED ELSEWHERE IN ACCORDANCE WITH THE SPECIFICATIONS TO PREVENT GIRDER ROTATION. SEE STANDARD DRAWING STD-14-1 AND ARTICLE 604.05 OF THE STANDARD SPECIFICATIONS.

SLAB OVERHANGS SUPPORTED BY BULB-TEE BEAMS: IT IS RECOMMENDED THAT SPACING OF OVERHANG BRACKETS FOR BULB-TEE BEAMS NOT EXCEED 2'-0" CENTER TO CENTER.

BEARING DEVICES SHALL BE IN ACCORDANCE WITH THE DETAILS AND DIMENSIONS SHOWN ON STANDARD DRAWING STD-14-1.

REINFORCING STEEL: SHALL BE ASTM A615 GRADE 60 UNLESS NOTED OTHERWISE. SEE SECTION 604 AND 907 OF THE STANDARD SPECIFICATIONS.

FRICTION PILES: TO BE STEEL PIPE OR HP PILES OF THE SIZE SHOWN ON THE SUBSTRUCTURE DRAWINGS. A STEEL HP TEST PILE (USED AS A PRODUCTION PILE) SHALL BE DRIVEN AT EACH ABUTMENT AND A STEEL PIPE TEST PILE (NON-PRODUCTION PILE) SHALL BE DRIVEN NEAR BENT 1 AS DESIGNATED ON DRAWINGS U-46-124 AND U-46-125. THE STEEL PIPE TEST PILE NEAR BENT 1 SHALL BE DYNAMICALLY MONITORED DURING DRIVING WITH A PDA IN ACCORDANCE WITH THE SPECIAL PROVISIONS. A LOAD TEST WILL THEN BE APPLIED TO THE TEST PILES IN ACCORDANCE WITH SECTION 606.08 OF THE STANDARD SPECIFICATIONS, WITH EXCEPTIONS THAT A MINIMUM WAITING PERIOD OF FOURTEEN (14) DAYS SHALL ELAPSE BETWEEN INSTALLING THE LOAD TEST PILE AND COMMENCING THE TEST AND THE FULL LOAD TEST ON THE UNFILLED STEEL PIPE PILE NEAR BENT 1 SHALL NOT EXCEED 700 TONS. FROM THE RESULTS OF THE LOAD TESTS FOR THE STEEL HP TEST PILES AT THE ABUTMENTS, THE ENGINEER WILL DETERMINE THE DRIVING CRITERIA FOR THE PRODUCTION PILES AT THE ABUTMENTS. FROM THE RESULTS OF THE STATIC LOAD TEST AND DYNAMIC TEST FOR THE STEEL PIPE TEST PILE, THE PDA CONSULTANT (STIPULATED IN THE SPECIAL PROVISIONS) WILL DETERMINE THE DRIVING CRITERIA FOR THE PRODUCTION PILES AT THE BENTS, AS APPROVED BY THE ENGINEER. ADDITIONALLY, A SELECTED NUMBER OF PIPE PRODUCTION PILES IN THE BENTS AS DESIGNATED ON DRAWINGS U-46-124 AND U-46-125 SHALL BE DYNAMICALLY MONITORED DURING DRIVING WITH A PDA IN ACCORDANCE WITH THE SPECIAL PROVISIONS.

THE CONTRACTOR SHALL INSTALL PILING SUCH THAT ALL THE FOLLOWING REQUIREMENTS ARE MET. THE TIP ELEVATION FOR ALL TEST PILES AND PRODUCTION PILES SHALL BE EQUAL TO OR BELOW THE MINIMUM PILE TIP ELEVATION SHOWN ON THE PLANS. IN ADDITION, TEST PILES TO BE LOAD TESTED SHALL BE INSTALLED TO AT LEAST THE SPECIFIED BEARING SHOWN ON THE PLANS OR FULL LENGTH; ALL OTHER TEST PILES SHALL BE INSTALLED TO AT LEAST 1.5 TIMES THE SPECIFIED BEARING SHOWN ON THE PLANS OR FULL LENGTH. ALL PRODUCTION PILES SHALL BE INSTALLED FULL LENGTH UNLESS EXCESSIVELY HARD DRIVING WHICH MIGHT DAMAGE THE PILE IS ENCOUNTERED. IF THE PRODUCTION PILES DO NOT ACHIEVE THE MINIMUM REQUIRED BEARING, THE ENGINEER OF RECORD WILL DETERMINE IF ADDITIONAL PILES ARE REQUIRED.

IN THE EVENT THAT DRIVING TEST PILES TO AT LEAST THE MINIMUM TIP ELEVATION OR DRIVING THE PRODUCTION PILES TO FULL LENGTH MIGHT DAMAGE THE PILES BECAUSE OF EXCESSIVELY HARD DRIVING, THE CONTRACTOR SHALL USE OTHER METHODS APPROVED BY THE ENGINEER FOR INSTALLING THE PILES SUCH AS JETTING OR PRE-DRILLING HOLES. HOWEVER, ALL PILES MUST BE DRIVEN BY HAMMER FOR THE LAST FEW FEET OF PENETRATION. INSTALLATION METHOD FOR PRODUCTION PILES MUST BE THE SAME AS USED FOR TEST PILES. NO MEASUREMENT FOR PAYMENT WILL BE MADE FOR PRE-DRILLING HOLES OR FOR JETTING PILES TO OBTAIN THE REQUIRED PILE PENETRATION.

THE PILE LOAD TEST SHALL BE CONDUCTED IN ACCORDANCE WITH SECTION 606.08 OF THE STANDARD SPECIFICATIONS, WITH EXCEPTIONS NOTED ABOVE. THE PILE LOAD TEST APPARATUS FOR APPLYING LOADS AND MEASURING MOVEMENT SHALL MEET THE REQUIREMENTS OF ASTM D-1143, STANDARD METHOD OF TESTING PILES UNDER STATIC AXIAL COMPRESSIVE LOAD. WHEN INSUFFICIENT CLEARANCE IS AVAILABLE WITHIN AN EXCAVATION, THE CLEARANCE REQUIREMENTS IN ARTICLE 4.1.1 MAY BE REDUCED, BUT ONLY WITH PRIOR APPROVAL OF THE ENGINEER.

ALTERNATE PILES: THE CONTRACTOR MAY USE PILING OF A DIFFERENT MATERIAL OR CONFIGURATION FROM THAT SHOWN ON THE PLANS PROVIDED THE SUBSTITUTION MEETS MINIMUM DESIGN STANDARDS AND SPECIFICATIONS AND IS APPROVED BY THE ENGINEER.

PILE PROTECTION SYSTEMS: AT ALL BENTS AND AFTER THE STEEL PIPE PILES HAVE BEEN DRIVEN TO THEIR FINAL ELEVATION, A CONCRETE COLLAR AS DETAILED ON STANDARD DRAWING STD-5-2 SHALL BE CONSTRUCTED ONE (1) FOOT ABOVE AND THREE (3) FEET BELOW THE FINISHED GROUND ELEVATION INDICATED ON THE CONTRACT PLANS, WITH THE EXCEPTION AT BENTS 1 & 2 WHERE CONCRETE COLLARS SHALL BE CONSTRUCTED A MINIMUM (3) FEET ABOVE AND (3) FEET BELOW THE FINISHED GRADE ELEVATION WITH THE TOP OF THE COLLAR NOT LESS THAN ELEVATION 218.00.

STEEL PIPE PILES THAT EXTEND ABOVE THE GROUND OR WATER SURFACE SHALL BE PAINTED AS SPECIFIED IN SUBSECTION 606.19 OF THE STANDARD SPECIFICATIONS. THIS PROTECTION SHALL EXTEND FROM AN ELEVATION 2 FT. BELOW THE LOW WATER OR GROUND SURFACE TO THE TOP OF THE EXPOSED STEEL. PORTIONS OF PILING TO BE PAINTED BELOW THE WATER SURFACE IN THE CHANNEL SHALL BE PAINTED PRIOR TO INSTALLATION. THE TOP COAT COLOR SHALL BE GREY, CONFORMING TO FEDERAL STANDARD 595A. INSTEAD OF FIELD PAINTING, STEEL PILES MAY BE SHOP PAINTED PROVIDED THE CONTRACTOR REPAIRS TO THE SATISFACTION OF THE ENGINEER ANY AREAS DAMAGED DUE TO HANDLING OR INSTALLATION.

BRIDGE RAIL SYSTEM: BUILD BRIDGE RAILINGS ACCORDING TO STANDARD DRAWING STD-1-1SS, MODIFIED TO 1'-0" WIDE AT TOP TO ACCOMMODATE METAL RAILING. SEE DRAWING U-46-123 FOR FURTHER INFORMATION.

NOTE: THE CONTRACTOR SHALL PROVIDE 100% CONVENTIONAL FALL PROTECTION FOR WORKERS INSTALLING DECKING ABOVE 15 FEET.

SHOP DRAWINGS: SEE SECTION 105.02 OF THE STANDARD SPECIFICATIONS.

RIP-RAP: MACHINED RIP-RAP SHALL BE CLASS "C" IN ACCORDANCE WITH SECTION 709 OF THE STANDARD SPECIFICATIONS AND SHALL BE MEASURED AND PAID FOR UNDER ITEM 709-05.09. SEE SHEETS 2A AND 5B OF THE ROADWAY PLANS FOR LIMITS OF THE RIPRAP AND QUANTITY.

VALUE ENGINEERING ALTERNATE BRIDGE DESIGN CRITERIA: ALTERNATE BRIDGE DESIGN PROPOSALS MAY NOT DIMINISH THE FUNCTIONAL OR STRUCTURAL EQUIVALENCY OF THE BRIDGE AND MUST MEET OR EXCEED BOTH THE SERVICE LEVEL AND ULTIMATE CAPACITIES OF THE CONTRACT PLANS STRUCTURE. ADDITIONALLY, THE WATERWAY OPENING AND FLOOD CLEARANCES MAY NOT BE REDUCED. ALTERNATE DESIGNS WILL REQUIRE APPROVAL OF THE ENGINEER.

REQUIREMENTS AND RESTRICTIONS FOR PHASE CONSTRUCTION:
1. THE LOCATION OF LONGITUDINAL CONSTRUCTION JOINTS SHALL NOT BE CHANGED TO ACCOMMODATE REMAIN-IN-PLACE DECK FORMS.
2. NO SHEET PILES OR BEARING PILES MAY BE DRIVEN FROM THE PROPOSED STRUCTURE.
3. DURING PHASE I CONSTRUCTION, TRAFFIC IS TO RUN ON THE EXISTING BRIDGE UNDISTURBED.

NOTE: THE FILLS AT THE ENDS OF THE BRIDGE SHALL BE IN PLACE AND THOROUGHLY COMPACTED BEFORE ANY ABUTMENT PILES ARE DRIVEN.

FINISHING CONCRETE SURFACES WITH APPLIED TEXTURE FINISH:
CONCRETE FINISHING SHALL BE IN ACCORDANCE WITH SECTION 604.21 OF THE TENNESSEE STANDARD SPECIFICATIONS. A CLASS "1" FINISH FOLLOWED BY AN APPLIED TEXTURE FINISH SHALL BE USED IN LIEU OF A CLASS II FINISH. NO TEXTURE FINISH SHALL BE APPLIED PRIOR TO COMPLETION OF PAVING AND HAULING OPERATIONS AT THE BRIDGE SITE. THE APPLIED TEXTURE FINISH SHALL BE MEASURED AND PAID FOR UNDER ITEM NO. 604-04.01.

PIPE PILES FOR BENTS 1, 2, 3, 4, 5 & 6: SHALL BE PP 24" X ½", GRADE 3, IN ACCORDANCE WITH ASTM A252. WEATHERING STEEL WILL NOT BE ALLOWED FOR PIPE PILES. ANY PIPE PILE HAVING BENDS, KINKS OR OTHER DEFORMATIONS DURING THE PROCESS OF DRIVING THAT WOULD IMPAIR THE STRENGTH (10% REDUCTION AS DETERMINED BY THE ENGINEER) EFFICIENCY OF THE COMPLETED PILE SHALL BE EITHER REMOVED AND REPLACED OR REPAIRED BY THE CONTRACTOR IN A MANNER SATISFACTORY TO THE ENGINEER. THE CONTRACTOR WILL NOT BE REIMBURSED FOR ANY SUCH PIPE PILE ORDERED REMOVED OR REPLACED BY THE ENGINEER.

PILE SPLICES: FULL LENGTH PILES SHALL BE USED WHERE PRACTICAL. PILES MAY BE SPLICED WITH THE PRIOR APPROVAL OF THE ENGINEER. SPLICES SHALL USE FULL PENETRATION WELDS DESIGNED TO DEVELOP THE FULL STRENGTH OF THE PILE CROSS SECTION IN TENSION AND COMPRESSION. ONLY ONE SPLICE PER 40 LINEAR FEET OF PILE WILL BE ALLOWED. DRIVE ON SPLICES SHALL NOT BE USED AND ONLY COMMERCIALLY MANUFACTURED SPLICES WILL BE ALLOWED. SPLICING DETAILS MUST BE SUBMITTED TO THE ENGINEER FOR APPROVAL. COST TO BE INCLUDED IN THE COST OF PILES ITEM NO. 606-22.13.

SPECIAL NOTE FOR UTILITIES: RELOCATION/INSTALLATION OF 20" DIAMETER WATER LINE TO BE COMPLETED BY OTHERS (MLGW). EXISTING 20" DIAMETER WATER LINE TO REMAIN IN-PLACE. CONTRACTOR SHALL COOPERATE WITH OTHERS IN THE INSTALLATION OF THE WATER LINE WITH NO ADDITIONAL COMPENSATION ALLOWED THE CONTRACTOR AS A RESULT.

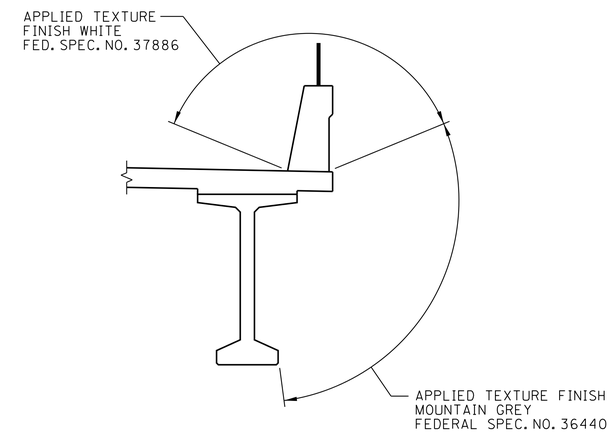

CONCRETE FINISH SKETCH
N.T.S.

NOTE: IN ADDITION TO THE SURFACES SHOWN IN THE ABOVE SKETCH, ALL EXPOSED SURFACES OF WINGWALLS, ENDWALLS, ABUTMENT BEAMS, AND BENT CAPS ARE TO RECEIVE AN APPLIED TEXTURE FINISH, MOUNTAIN GREY, FED. SPEC. NO. 36440.

2030 ADT = 18,632
72'-0" ROADWAY WITH MODIFIED STD-1-1SS PARAPET
DESIGN SPEED = 50 MPH

STATE OF TENNESSEE
DEPARTMENT OF TRANSPORTATION

GENERAL NOTES
RALEIGH-MILLINGTON ROAD
OVER THE LOOSAHATCHIE RIVER
BRIDGE I.D. NO. 79S81030001
STATION 21+76.35
LOG MILE 3.88
SHELBY COUNTY
2013

DESIGNED BY	JOHN CROSSLIN	DATE	5/2012
DRAWN BY	MIKE BUCKNER	DATE	5/2012
SUPERVISED BY	ERIC NELSON	DATE	5/2012
CHECKED BY	BEN SHEALY	DATE	5/2012

2/5/2013 2:01:55 PM
G:\6022094 7 Raleigh-Millington Bridge\Cad\GeneralNotes.dgn

TENNESSEE D.O.T.
DESIGN DIVISION
FILE NO.

ESTIMATED QUANTITIES

	ITEM NO.	DESCRIPTION	UNIT	TOTAL	SUPERSTRUCTURE	ABUTMENT 1	BENT 1	BENT 2	BENT 3	BENT 4	BENT 5	BENT 6	ABUTMENT 2
9	202-04.01	REMOVAL OF STRUCTURES	LS	1	--	--	--	--	--	--	--	--	--
1	204-02.01	DRY EXCAVATION (BRIDGES)	C.Y.	184	--	92	--	--	--	--	--	--	92
2	303-01.02	GRANULAR BACKFILL (BRIDGES)	TON	70	--	35	--	--	--	--	--	--	35
	604-02.03	EPOXY COATED REINFORCING STEEL	LB.	577,459	570,313	3,573	--	--	--	--	--	--	3,573
	604-03.01	CLASS A CONCRETE (BRIDGES)	C.Y.	1,040	--	103	139	139	139	139	139	139	103
	604-03.02	STEEL BAR REINFORCEMENT (BRIDGES)	LB.	540,772	13,374	12,962	83,579	83,579	83,579	83,579	83,579	83,579	12,962
3	604-03.04	PAVEMENT AT BRIDGE ENDS	S.Y.	392	--	196	--	--	--	--	--	--	196
	604-03.09	CLASS D CONCRETE (BRIDGE DECK)	C.Y.	2,082	2,082	--	--	--	--	--	--	--	--
	604-04.01	APPLIED TEXTURE FINISH (NEW STRUCTURES)	S.Y.	4,349	3,529	65	115	115	115	115	115	115	65
	604-05.31	BRIDGE DECK GROOVING (MECHANICAL)	S.Y.	7,394	7,394	--	--	--	--	--	--	--	--
8	606-04.01	TEST PILES (STEEL PILES, 14 INCH)	L.F.	205	--	95	--	--	--	--	--	--	110
	606-04.02	LOADING TEST (STEEL PILES, 14 INCH)	EA.	2	--	1	--	--	--	--	--	--	1
8	606-04.03	STEEL PILES (14 INCH)	L.F.	3,700	--	1,700	--	--	--	--	--	--	2,000
	606-04.06	PILE TIPS (STEEL PILES, 14 INCH)	EA.	42	--	21	--	--	--	--	--	--	21
7	606-22.13	STEEL PIPE PILES (24 IN)	L.F.	9,595	--	--	1,650	1,655	1,545	1,545	1,545	1,655	--
7	606-22.15	TEST PILES (STEEL PIPE PILES, 24 IN)	L.F.	160	--	--	160	--	--	--	--	--	--
11	606-22.16	LOAD TESTING (STEEL PIPE PILES, 24 IN)	EA.	1	--	--	1	--	--	--	--	--	--
12	606-22.17	DYNAMIC MONITORING (STEEL PIPE PILES, 24 IN)	EA.	5	--	--	--	1	1	1	1	1	--
4	615-01.12	PRESTRESSED CONCRETE BULB TEE BEAM (6" WEB)(BT-72)	L.F.	8,150	8,150	--	--	--	--	--	--	--	--
10	620-05.01	CONC PARAPET SINGLE SLOPE (STD-1-1SS, MODIFIED)	L.F.	1,904	1,904	--	--	--	--	--	--	--	--
5	707-99.01	WROUGHT IRON FENCE	LS	1	1	--	--	--	--	--	--	--	--
6	710-09.01	6" PERFORATED PIPE WITH VERTICAL DRAIN SYSTEM	L.F.	204	--	102	--	--	--	--	--	--	102
	710-09.02	6" PIPE UNDERDRAIN	L.F.	58	--	29	--	--	--	--	--	--	29
	712-12.47	BRIDGE MOUNTED INTERCONNECTED PORTABLE BARRIER RAIL	L.F.	967	--	--	--	--	--	--	--	--	--

1. EXCAVATION BASED ON FINAL PROFILE AT THE ABUTMENTS.
2. GRANULAR BACKFILL SHALL BE CLASS 'A' GRADING 'D' MATERIAL. SEE STANDARD DRAWING STD-10-1.
3. PRIOR TO THE CONSTRUCTION OF THE PAVEMENT AT THE BRIDGE ENDS, THE CONTRACTOR SHALL SUBMIT A PROPOSED BILL OF STEEL TO THE ENGINEER FOR APPROVAL.
4. COST OF ELASTOMERIC PADS AND RUBBER BONDING CEMENT TO BE INCLUDED IN THE UNIT PRICE BID FOR THE PRESTRESSED BEAMS.
5. LUMP SUM FOR WROUGHT IRON FENCE. ITEM NO. 707-99.01, INCLUDES 1888 LINEAR FEET OF BLACK POWDER COATED WROUGHT IRON FENCING (18" MINIMUM HEIGHT), POSTS, PLATES, ANCHOR BOLTS. ELASTOMERIC PADS AND OTHER MATERIALS AND LABOR NECESSARY FOR THE COMPLETE INSTALLATION OF THE FENCE. SEE DRAWING U-46-123 FOR DETAILS.
6. COST OF POLYETHYLENE SHEETING AND ALL MISCELLANEOUS ITEMS NECESSARY FOR INSTALLATION TO BE INCLUDED IN THE UNIT PRICE BID FOR THE PERFORATED PIPE.
7. ALL PIPE PILES ARE TO BE FILLED WITH CLASS "A" CONCRETE TO THE ELEVATION SHOWN IN THE PILE DATA TABLE. COST OF CLASS "A" FILL CONCRETE TO BE INCLUDED IN THE UNIT PRICE FOR ITEM 604-03.01. COST OF REINFORCING STEEL INSIDE PIPE PILES IS TO BE INCLUDED IN THE UNIT COST FOR ITEM 604-03.02. PIPE PILES ARE TO BE FILLED WITH CONCRETE IN ACCORDANCE WITH SECTION 606.07 OF THE STANDARD SPECIFICATION. THE TOP 25 FEET SHALL BE CONSOLIDATED.
8. ALL "H" PILES ARE TO BE HP 14X73, ASTM A36.
9. LUMP SUM REMOVAL OF EXISTING BRIDGE NO. 79S81030001 AND APPROACHES (INCLUDING REMOVAL OF CONCRETE, ASPHALT AND OTHER DEBRIS LOCATED AT THE SOUTH END OF THE EXISTING BRIDGE) TO AN ELEVATION 2'-0" BELOW NATURAL GROUND FROM STATION 17+13 TO 26+34 ACCORDING TO PHASE CONSTRUCTION DRAWING NOS. U-46-103 AND U-46-104. EXISTING BRIDGE CONSISTS OF 24 SPANS OF CONTINUOUS STEEL GIRDERS WITH COMPOSITE CONCRETE DECK SLAB AND OUT TO OUT WIDTH OF 30'-10". EXISTING BRIDGE LENGTH IS 921'-0".
10. THE COST OF 28 BRIDGE DECK DRAINS AND 3" DIA. HDPE CONDUIT (INCLUDING PULL BOXES) TO BE INCLUDED IN THE UNIT COST FOR ITEM 620-05.01.
11. COST FOR LOAD TEST OF STEEL PIPE PILES SHALL INCLUDE COSTS FOR STATIC LOAD TEST COMPLETED IN ACCORDANCE WITH SECTION 606.08 OF THE STANDARD SPECIFICATIONS (WITH EXCEPTIONS AS INDICATED IN THE GENERAL NOTES) AND FOR DYNAMICALLY MONITORING TEST PILE DURING DRIVING WITH A PDA (INCLUDING PILE RESTRIKES) IN ACCORDANCE WITH THE SPECIAL PROVISIONS.
12. COST FOR DYNAMIC MONITORING OF STEEL PIPE PILES SHALL INCLUDE COSTS FOR DYNAMICALLY MONITORING PRODUCTION PILES DURING DRIVING WITH A PDA AND FOR PILE RESTRIKES COMPLETED IN ACCORDANCE WITH THE SPECIAL PROVISIONS.

PILE DATA TABLE - HP PILES AT ABUTMENTS

LOCATION	DESIGN LOAD (TON)	TEST-PILE CUT-OFF EL. (FT)	ESTIMATED PILE LENGTH (FT)	TEST PILE LENGTH (FT)	MINIMUM TIP EL. (FT)	TYPE PILE
ABUTMENT 1	147	236.62	85	95	156	HP 14x73 STEEL
ABUTMENT 2	169	236.62	100	110	141	HP 14x73 STEEL

PILE DATA TABLE - 24" X 1/2" CONCRETE FILLED PIPE PILES AT BENTS

LOCATION	DESIGN LOAD (TON)	TEST-PILE CUT-OFF EL. (FT)	ESTIMATED PILE LENGTH (FT)	TEST PILE LENGTH ✳ (FT)	MINIMUM TIP EL. (FT)	CONCRETE BOTTOM EL. (FT)	TYPE PILE
BENT 1	430	✳✳	150	160	137	155	CONCRETE FILLED PIPE
BENT 2	404	235.92	150	155	137	155	CONCRETE FILLED PIPE
BENT 3	377	235.92	140	145	137	155	CONCRETE FILLED PIPE
BENT 4	377	235.92	140	145	137	155	CONCRETE FILLED PIPE
BENT 5	377	235.92	140	145	137	155	CONCRETE FILLED PIPE
BENT 6	443	235.92	150	155	137	155	CONCRETE FILLED PIPE

✳✳ AT COMPLETION OF TESTS, OUT-OF-POSITION TEST PILE NEAR BENT 1 SHALL BE CUT OFF TO AN ELEVATION 2'-0" BELOW NATURAL GROUND.

✳ LENGTH SHOWN AT BENTS 2-6 IS ESTIMATED LENGTH OF PILE TO BE DYNAMICALLY MONITORED DURING DRIVING, QUANTITY INCLUDED IN ITEM NO. 606-22.13.

CONST. NO.

PROJECT NO.	YEAR	SHEET NO.
79054-3407-04	2013	48

REVISIONS

NO.	DATE	BY	BRIEF DESCRIPTION

NOTES:

1. PIPE PILES AT BENTS SHALL BE DRIVEN OPEN-ENDED AND FILLED WITH CLASS "A" CONCRETE TO THE ELEVATION SHOWN IN THE PILE DATA TABLE. CONCRETE SHALL BE PLACED IN ACCORDANCE WITH SECTION 606.07 OF THE STANDARD SPECIFICATIONS. CONCRETE IN THE UPPER 25 FEET OF THE PIPE PILES SHALL BE CONSOLIDATED WITH VIBRATORS.
2. PRIOR TO PLACEMENT OF CONCRETE IN THE PIPE PILES, INSIDE OF PIPES SHALL BE INSPECTED AND CLEANED IN ACCORDANCE WITH SECTIONS 606.07 AND 606.15 OF THE STANDARD SPECIFICATIONS.
3. COSTS TO AUGER OUT MATERIAL, PLACE SAND IN PIPES, AND/OR PLACE TREMIE CONCRETE PLUGS IN ORDER TO FILL PIPE PILES WITH CONCRETE TO THE REQUIRED CONCRETE BOTTOM ELEVATION SHOWN IN THE TABLE SHALL BE INCLUDED IN THE UNIT COST FOR ITEM NO. 606-22.13.
4. DESIGN LOAD SHOWN IN THE PILE DATA TABLES IS THE REQUIRED NOMINAL BEARING RESISTANCE OF THE PILES AND INCLUDES THE ESTIMATED ULTIMATE STATIC SIDE FRICTION RESISTANCE IN THE SCOURABLE SOIL.
5. MINIMUM TIP ELEVATION SHOWN IN THE PILE DATA TABLES REPRESENTS THE MINIMUM TIP EMBEDMENT REQUIRED FOR STRUCTURAL STABILITY WITH FULL ESTIMATED SCOUR.

2030 ADT = 18,632
72'-0" ROADWAY WITH MODIFIED STD-1-1SS PARAPET
DESIGN SPEED = 50 MPH

STATE OF TENNESSEE
DEPARTMENT OF TRANSPORTATION

ESTIMATED QUANTITIES
RALEIGH-MILLINGTON ROAD OVER THE LOOSAHATCHIE RIVER
BRIDGE I.D. NO. 79S81030001
STATION 21+76.35
LOG MILE 3.88
SHELBY COUNTY
2013

DESIGNED BY JOHN CROSSLIN DATE 5/2012
DRAWN BY MIKE BUCKNER DATE 5/2012
SUPERVISED BY ERIC NELSON DATE 5/2012
CHECKED BY BEN SHEALY DATE 5/2012

2/6/2013 9:54:11 AM
G:\60220947 Raleigh-Millington Bridge\Cad\Quantities.dgn

TENNESSEE D.O.T.
DESIGN DIVISION
FILE NO.

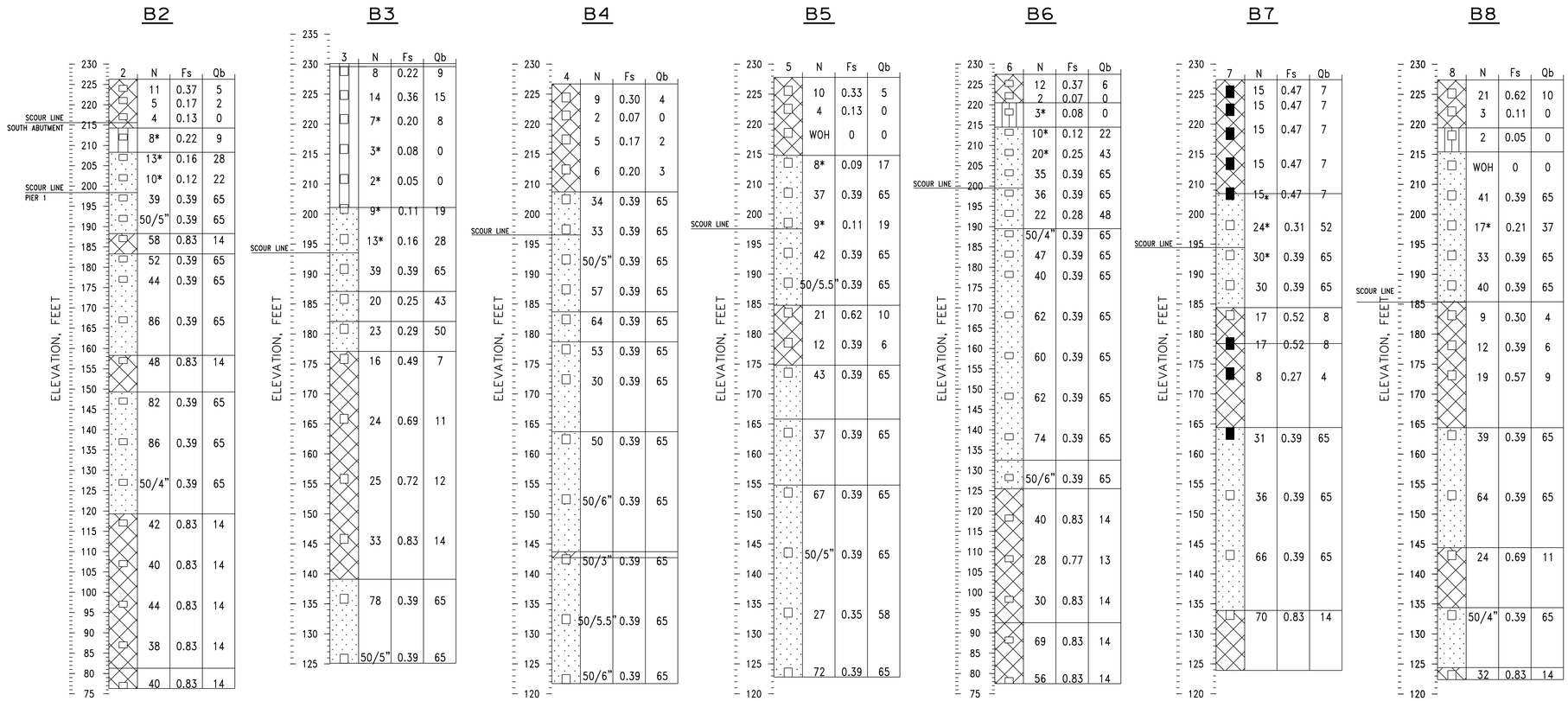

B2	N	Fs	Qb
	11	0.37	5
	5	0.17	2
	4	0.13	0
	8*	0.22	9
	13*	0.16	28
	10*	0.12	22
	39	0.39	65
	50/5"	0.39	65
	58	0.83	14
	52	0.39	65
	44	0.39	65
	86	0.39	65
	48	0.83	14
	82	0.39	65
	86	0.39	65
	50/4"	0.39	65
	42	0.83	14
	40	0.83	14
	44	0.83	14
	38	0.83	14
	40	0.83	14

B3	N	Fs	Qb
	8	0.22	9
	14	0.36	15
	7*	0.20	8
	3*	0.08	0
	2*	0.05	0
	9*	0.11	19
	13*	0.16	28
	39	0.39	65
	20	0.25	43
	23	0.29	50
	16	0.49	7
	24	0.69	11
	25	0.72	12
	33	0.83	14
	78	0.39	65
	50/5"	0.39	65

B4	N	Fs	Qb
	9	0.30	4
	2	0.07	0
	5	0.17	2
	6	0.20	3
	34	0.39	65
	33	0.39	65
	50/5"	0.39	65
	57	0.39	65
	64	0.39	65
	53	0.39	65
	30	0.39	65
	50	0.39	65
	50/6"	0.39	65
	50/3"	0.39	65
	50/5.5"	0.39	65
	50/6"	0.39	65

B5	N	Fs	Qb
	10	0.33	5
	4	0.13	0
	WOH	0	0
	8*	0.09	17
	37	0.39	65
	9*	0.11	19
	42	0.39	65
	50/5.5"	0.39	65
	21	0.62	10
	12	0.39	6
	43	0.39	65
	37	0.39	65
	67	0.39	65
	50/5"	0.39	65
	27	0.35	58
	72	0.39	65

B6	N	Fs	Qb
	12	0.37	6
	2	0.07	0
	3*	0.08	0
	10*	0.12	22
	20*	0.25	43
	35	0.39	65
	36	0.39	65
	22	0.28	48
	50/4"	0.39	65
	47	0.39	65
	40	0.39	65
	62	0.39	65
	60	0.39	65
	62	0.39	65
	74	0.39	65
	50/6"	0.39	65
	40	0.83	14
	28	0.77	13
	30	0.83	14
	69	0.83	14
	56	0.83	14

B7	N	Fs	Qb
	15	0.47	7
	15	0.47	7
	15	0.47	7
	15	0.47	7
	15*	0.47	7
	24*	0.31	52
	30*	0.39	65
	30	0.39	65
	17	0.52	8
	17	0.52	8
	8	0.27	4
	31	0.39	65
	36	0.39	65
	66	0.39	65
	70	0.83	14

B8	N	Fs	Qb
	21	0.62	10
	3	0.11	0
	2	0.05	0
	WOH	0	0
	41	0.39	65
	17*	0.21	37
	33	0.39	65
	40	0.39	65
	9	0.30	4
	12	0.39	6
	19	0.57	9
	39	0.39	65
	64	0.39	65
	24	0.69	11
	50/4"	0.39	65
	32	0.83	14

ABBREVIATIONS

* = SAMPLE WAS FOUND TO HAVE LIQUEFIABLE POTENTIAL

N = AVG SPT VALUE FOR INTERVAL SHOWN

Fs = ULTIMATE SIDE FRICTION FOR INTERVAL SHOWN (TSF)

Qb = ULTIMATE END BEARING FOR INTERVAL SHOWN (TSF)

NOTE: SHELBY TUBE SAMPLE "N" VALUES WERE ESTIMATED BASED ON FIELD POCKET PENETROMETER TEST

BORING 2 DATA WAS UTILIZED FOR BOTH THE SOUTH ABUTMENT AND PIER 1

LEGEND

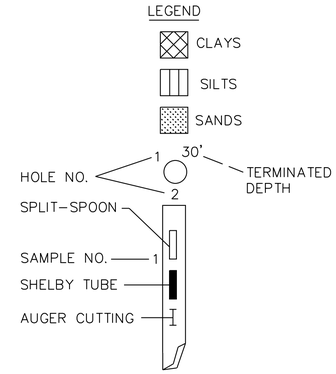

CONST. NO.

PROJECT NO.	YEAR	SHEET NO.
79054-3407-04	2013	49

REVISIONS

NO.	DATE	BY	BRIEF DESCRIPTION

2030 ADT = 18,632
72'-0" ROADWAY WITH MODIFIED STD-1-1SS PARAPET
DESIGN SPEED = 50 MPH

STATE OF TENNESSEE
DEPARTMENT OF TRANSPORTATION

FOUNDATION DATA
RALEIGH-MILLINGTON ROAD OVER THE LOOSAHATCHIE RIVER
BRIDGE I.D. NO. 79S81030001
STATION 21+76.35
LOG MILE 3.88
SHELBY COUNTY
2013

DESIGNED BY	JOHN CROSSLIN	DATE	5/2012
DRAWN BY	MIKE BUCKNER	DATE	5/2012
SUPERVISED BY	ERIC NELSON	DATE	5/2012
CHECKED BY	BEN SHEALY	DATE	5/2012

U-46-102

2/5/2013 3:09:14 PM
G:\60220947 Raleigh-Millington Bridge\Cad\FoundationData1.dgn

TENNESSEE D.O.T.
DESIGN DIVISION
FILE NO.

CONST. NO.

PROJECT NO.	YEAR	SHEET NO.
79054-3407-04	2013	50

REVISIONS

NO.	DATE	BY	BRIEF DESCRIPTION

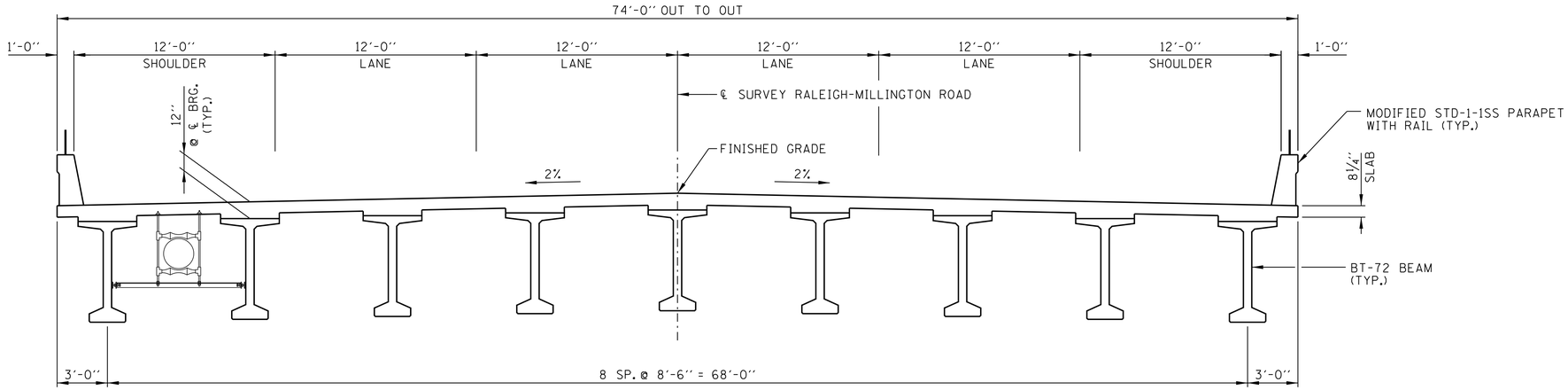

TYPICAL SECTION
(LOOKING FORWARD ON SURVEY)
(SCALE 1/4"=1'-0")

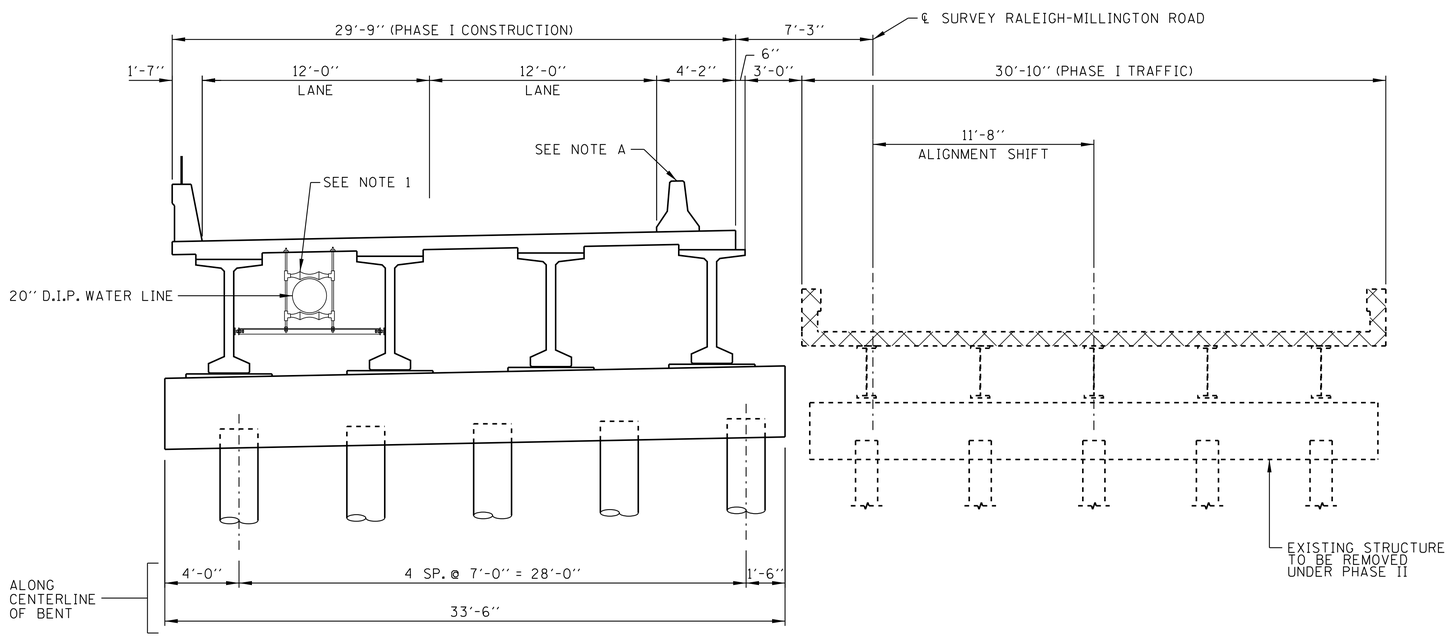

PHASE I CONSTRUCTION
(LOOKING FORWARD ON SURVEY)
(SCALE 1/4"=1'-0")

NOTE 1:

RELOCATION/INSTALLATION OF 20" DUCTILE IRON PIPE WATER LINE TO BE COMPLETED BY OTHERS (MLGW). INCLUDING DESIGN AND CONSTRUCTION OF UTILITY HANGER SUPPORTS. CONTRACTOR SHALL PROVIDE INSERTS IN DECK SLAB AND BULB-TEE BEAMS FOR HANGER SUPPORTS IN COORDINATION WITH MLGW REQUIREMENTS. COSTS FOR INSERTS SHALL BE CONSIDERED INCIDENTAL TO THE COSTS OF OTHER ITEMS. INTERMEDIATE DIAPHRAGM DETAILS SHOWN ON STD-14-1 FOR BULB-TEE BEAMS SHALL BE MODIFIED IF NEEDED TO ACCOMMODATE WATER LINE AND SUBMITTED TO THE ENGINEER FOR APPROVAL.

2030 ADT = 18,632
72'-0" ROADWAY WITH MODIFIED STD-1-1SS PARAPET
DESIGN SPEED = 50 MPH

STATE OF TENNESSEE
DEPARTMENT OF TRANSPORTATION

PHASING SEQUENCE I
RALEIGH-MILLINGTON ROAD
OVER THE LOOSAHATCHIE RIVER
BRIDGE I.D. NO. 79S81030001
STATION 21+76.35
LOG MILE 3.88
SHELBY COUNTY
2013

DESIGNED BY	JOHN CROSSLIN	DATE	5/2012
DRAWN BY	MIKE BUCKNER	DATE	5/2012
SUPERVISED BY	ERIC NELSON	DATE	5/2012
CHECKED BY	BEN SHEALY	DATE	5/2012

NOTE A:

INTERCONNECTED PORTABLE BARRIER RAIL. SEE STD. DWG. STD-2-1.

U-46-103

2/5/2013 3:19:45 PM
G:\60220947 Raleigh-Millington Bridge\Cad\SS_phase_constr_1.dgn

TENNESSEE D.O.T.
DESIGN DIVISION
FILE NO.

CONST. NO.

PROJECT NO.	YEAR	SHEET NO.
79054-3407-04	2013	51

REVISIONS

NO.	DATE	BY	BRIEF DESCRIPTION

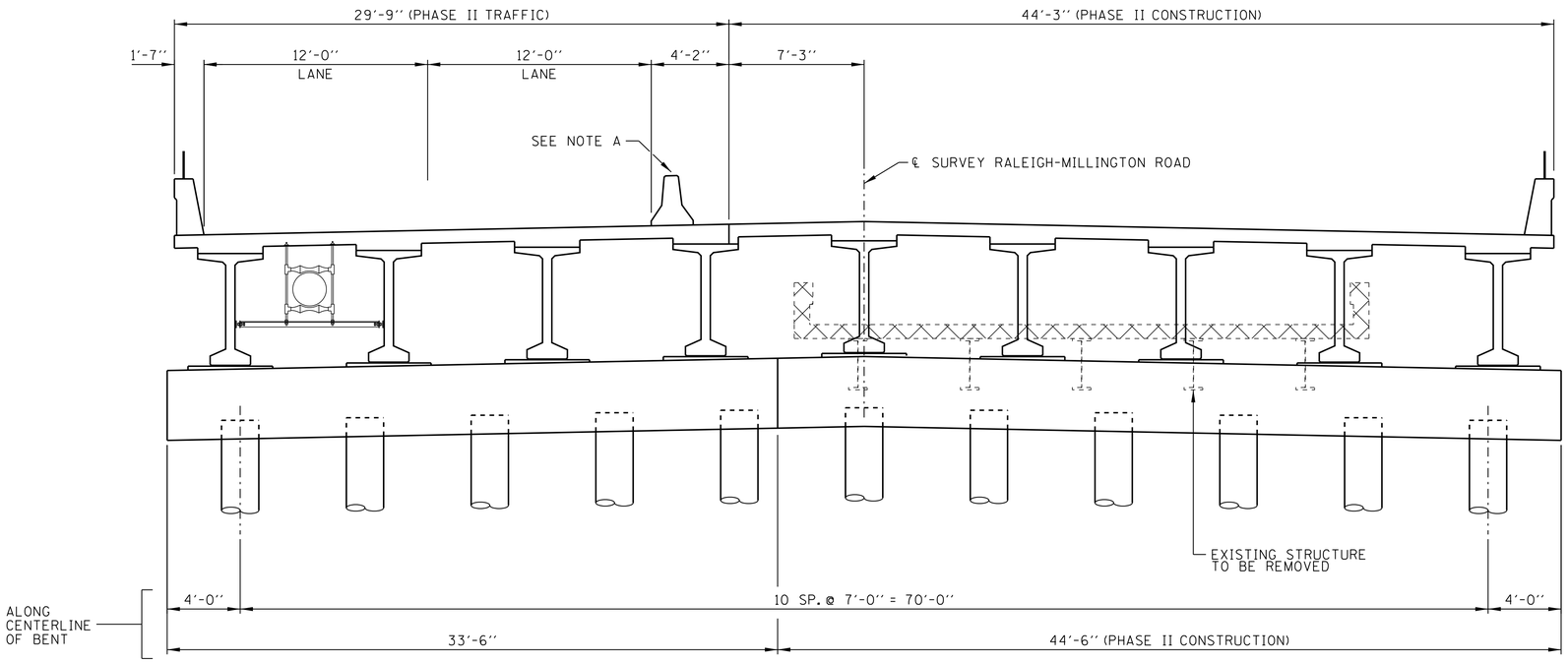

PHASE II CONSTRUCTION
(LOOKING FORWARD ON SURVEY)
(SCALE 1/4"=1'-0")

NOTE A:
INTERCONNECTED PORTABLE BARRIER RAIL. SEE STD. DWG. STD-2-1.

2030 ADT = 18,632
72'-0" ROADWAY WITH MODIFIED STD-1-1SS PARAPET
DESIGN SPEED = 50 MPH

STATE OF TENNESSEE
DEPARTMENT OF TRANSPORTATION

PHASING SEQUENCE II
RALEIGH-MILLINGTON ROAD
OVER THE LOOSAHATCHIE RIVER
BRIDGE I.D. NO. 79S81030001
STATION 21+76.35
LOG MILE 3.88
SHELBY COUNTY
2013

DESIGNED BY	JOHN CROSSLIN	DATE	5/2012
DRAWN BY	MIKE BUCKNER	DATE	5/2012
SUPERVISED BY	ERIC NELSON	DATE	5/2012
CHECKED BY	BEN SHEALY	DATE	5/2012

2/5/2013 3:21:18 PM
G:\60220947 Raleigh-Millington Bridge\Cad\SS_phase_constr_2.dgn

U-46-104

TENNESSEE D.O.T.
DESIGN DIVISION
FILE NO.

CONST. NO.

PROJECT NO.	YEAR	SHEET NO.
79054-3407-04	2013	52

REVISIONS

NO.	DATE	BY	BRIEF DESCRIPTION

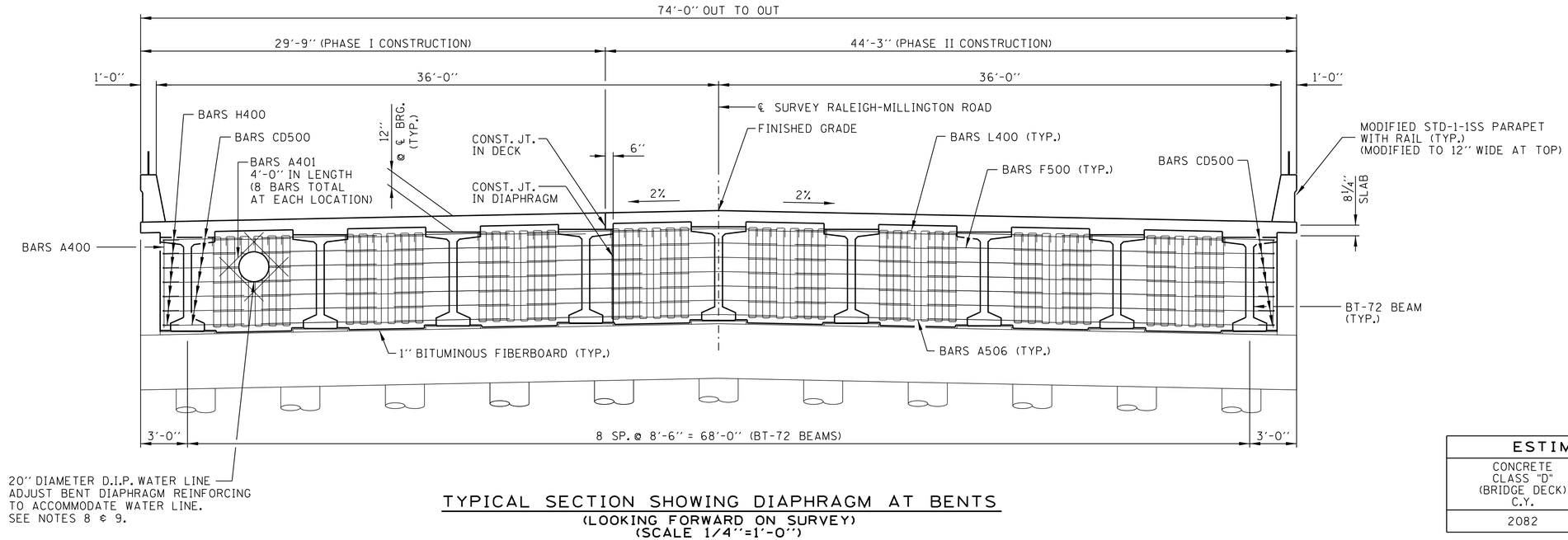

TYPICAL SECTION SHOWING DIAPHRAGM AT BENTS

(LOOKING FORWARD ON SURVEY)
(SCALE 1/4"=1'-0")

ESTIMATED QUANTITIES		
CONCRETE CLASS "D" (BRIDGE DECK) C.Y.	EPOXY COATED REINFORCING STEEL LB.	REINFORCING STEEL LB.
2082	570,313	13,374

SUPERSTRUCTURE GENERAL NOTES

1. NOTE: DIAPHRAGMS SHALL BE POURED CONCURRENTLY WITH THE DECK SLAB. ALL DIAPHRAGM CONCRETE SHALL BE INCLUDED IN THE QUANTITY FOR ITEM NO. 604-03.09.
2. NOTE: NO PORTION OF THE BRIDGE RAIL SHALL BE POURED UNTIL THE DECK SLAB IS IN PLACE.
3. NOTE: WHEN POURING SLAB, PROVISIONS SHALL BE MADE FOR SETTING REINFORCING STEEL FOR BRIDGE PARAPET. THE BRIDGE PARAPET SHALL NOT BE POURED UNTIL THE SLAB IS POURED AND CURED.
4. NOTE: THE CONTRACTOR IS SOLELY RESPONSIBLE FOR SUPPORTING THE BEAMS TO PREVENT DAMAGE DUE TO TWISTING OR OVERTURNING DURING ALL PHASES OF CONSTRUCTION. IT IS STRONGLY RECOMMENDED THAT THE TEMPORARY ERECTION DIAPHRAGMS BE INSTALLED PRIOR TO PLACING ANY LOADS ON THE GIRDERS. HOWEVER, TEMPORARY ERECTION DIAPHRAGMS MUST BE IN PLACE IN THE SPAN AT THE TIME THE SLAB IS POURED IN SAID SPAN.
5. SPECIAL NOTE FOR ANCHOR BOLTS AT BENTS: ANCHOR BOLT ASSEMBLIES AT BENTS SHALL BE IN ACCORDANCE WITH STANDARD DRAWING STD-6-1.
6. SEE STD-1-1SS FOR PLACEMENT OF BARS B570E.
7. COST OF CONCRETE AND REINFORCING STEEL IN MODIFIED PARAPET TO BE INCLUDED IN THE COST OF ITEM 620-05.01. SEE DRAWING U-46-123.
8. RELOCATION/INSTALLATION OF 20" DUCTILE IRON PIPE WATER LINE TO BE COMPLETED BY OTHERS (MLGW).
9. EXACT LOCATION AND SIZE OF OPENING IN BENT DIAPHRAGM FOR WATER LINE SHALL BE DETERMINED BY CONTRACTOR IN COORDINATION WITH MLGW REQUIREMENTS AND SUBMITTED TO ENGINEER FOR APPROVAL.

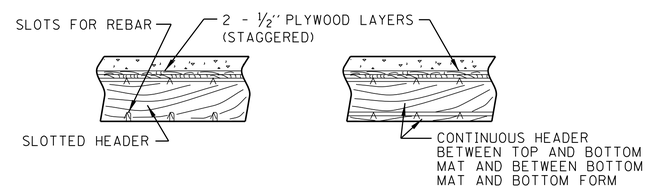

ALTERNATE "A" ALTERNATE "B"

ALTERNATE HEADER DETAILS

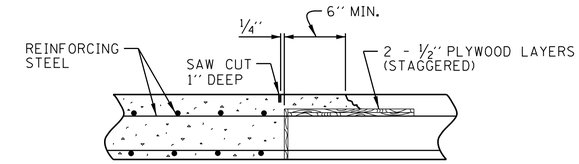

SLAB CONSTRUCTION JOINT DETAIL

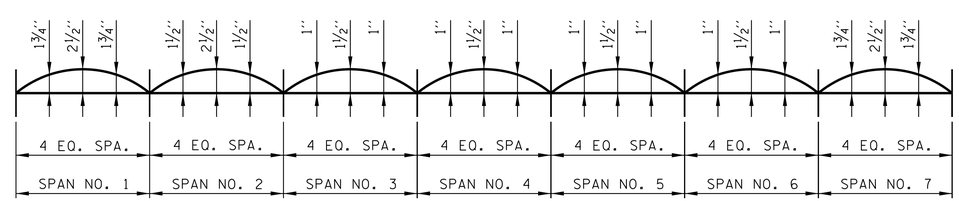

DEAD LOAD CORRECTION CURVE

THIS CURVE IS FOR DEAD LOAD SLAB AND ALL DEAD LOADS THAT ARE APPLIED AFTER SLAB IS IN PLACE AND SHOULD BE CORRECTED TO COMPENSATE FOR THE EFFECTS DUE TO VERTICAL CURVE.

DECK CONCRETE POURING SEQUENCE

SLAB CONSTRUCTION JOINTS MAY BE LOCATED AT THE CONTRACTOR'S OPTION SUBJECT TO THE FOLLOWING:

1. NO CONSTRUCTION JOINT MAY BE LOCATED CLOSER THAN 10'-0" OR FURTHER THAN 15'-0" FROM AN INTERIOR SUPPORT.
2. THE SLAB IN THE MIDDLE SECTION OF BOTH ADJACENT SPANS MUST BE POURED TO WITHIN AT LEAST 15'-0" OF THE SUPPORTS EITHER PRIOR TO OR CONCURRENTLY WITH THE SLAB OVER AN INTERIOR SUPPORT.
3. ALL SLAB CONSTRUCTION JOINTS SHALL BE IN ACCORDANCE WITH THE SLAB CONSTRUCTION JOINT DETAIL SHOWN.

2030 ADT = 18,632
72'-0" ROADWAY WITH MODIFIED STD-1-1SS PARAPET
DESIGN SPEED = 50 MPH

STATE OF TENNESSEE
DEPARTMENT OF TRANSPORTATION

SUPERSTRUCTURE TYPICAL SECTION I RALEIGH-MILLINGTON ROAD OVER THE LOOSAHATCHIE RIVER BRIDGE I.D. NO. 79S81030001 STATION 21+76.35 LOG MILE 3.88 SHELBY COUNTY 2013

DESIGNED BY	JOHN CROSSLIN	DATE	5/2012
DRAWN BY	MIKE BUCKNER	DATE	5/2012
SUPERVISED BY	ERIC NELSON	DATE	5/2012
CHECKED BY	BEN SHEALY	DATE	5/2012

2/5/2013 3:32:24 PM
G:\60220947 Raleigh-Millington Bridge\Cad\SS_section.dgn

TENNESSEE D.O.T.
DESIGN DIVISION
FILE NO.

CONST. NO.		
PROJECT NO.	YEAR	SHEET NO.
79054-3407-04	2013	53

REVISIONS

NO.	DATE	BY	BRIEF DESCRIPTION

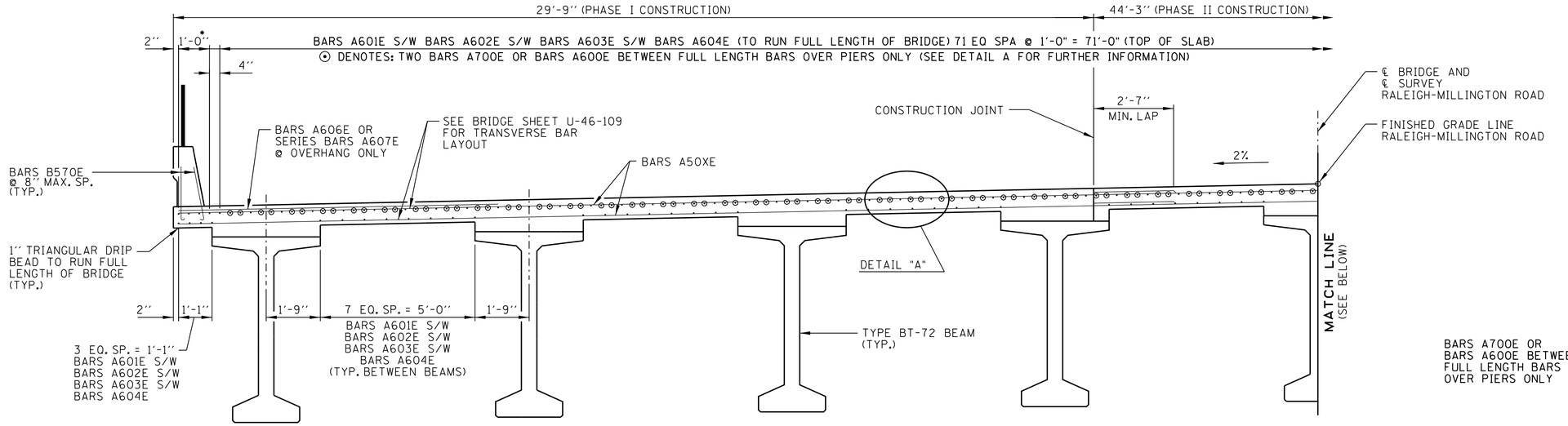

* BARS A601E S/W BARS A602E S/W BARS A603E S/W BARS A604E (TO RUN FULL LENGTH OF BRIDGE) 3 EQ. SP. = 1'-0"

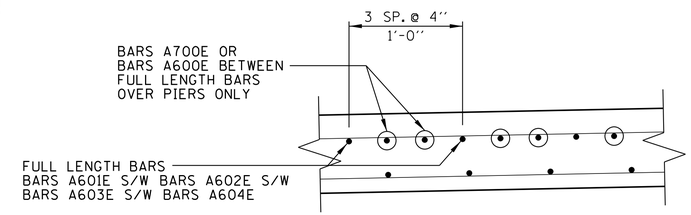

DETAIL "A"
(SCALE 1½"=1'-0")

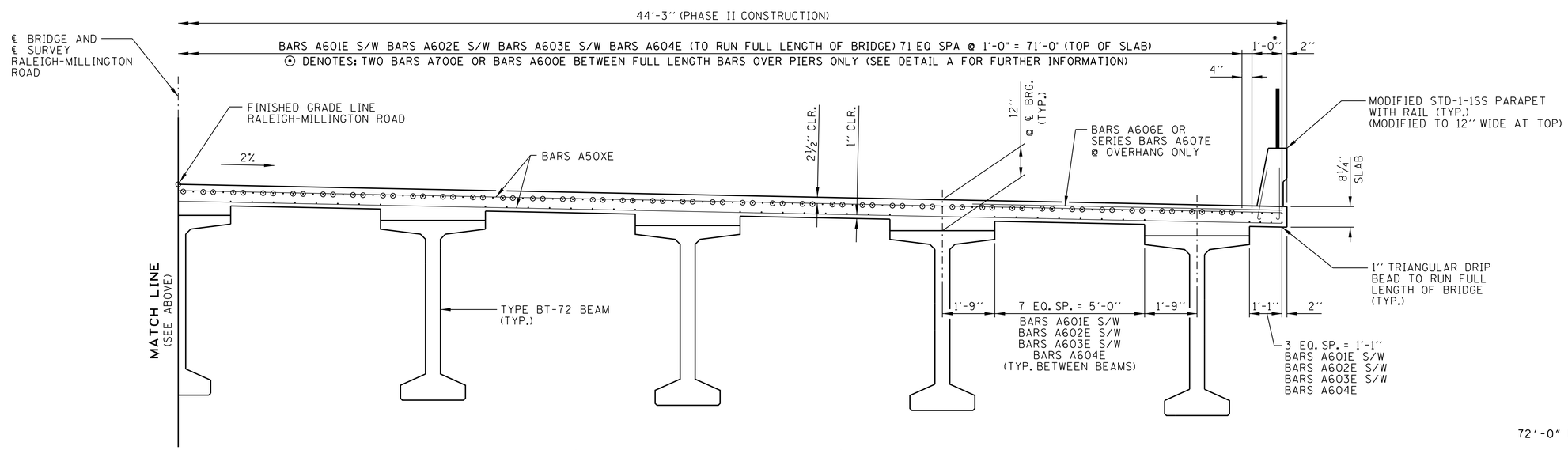

TYPICAL SECTION NEAR MIDSPAN
(SCALE ½"=1'-0")

2030 ADT = 18,632
72'-0" ROADWAY WITH MODIFIED STD-1-1SS PARAPET
DESIGN SPEED = 50 MPH

STATE OF TENNESSEE
DEPARTMENT OF TRANSPORTATION

SUPERSTRUCTURE TYPICAL SECTION II RALEIGH-MILLINGTON ROAD OVER THE LOOSAHATCHIE RIVER

BRIDGE I.D. NO. 79S81030001
STATION 21+76.35
LOG MILE 3.88
SHELBY COUNTY
2013

DESIGNED BY	JOHN CROSSLIN	DATE	5/2012
DRAWN BY	MIKE BUCKNER	DATE	5/2012
SUPERVISED BY	ERIC NELSON	DATE	5/2012
CHECKED BY	BEN SHEALY	DATE	5/2012

2/5/2013 3:37:37 PM
G:\60220947 Raleigh-Millington Bridge\Cad\SS_section_rebar.dgn

U-46-106

TENNESSEE D.O.T.
DESIGN DIVISION
FILE NO.

CONST. NO.		
PROJECT NO.	YEAR	SHEET NO.
79054-3407-04	2013	54

REVISIONS

NO.	DATE	BY	BRIEF DESCRIPTION

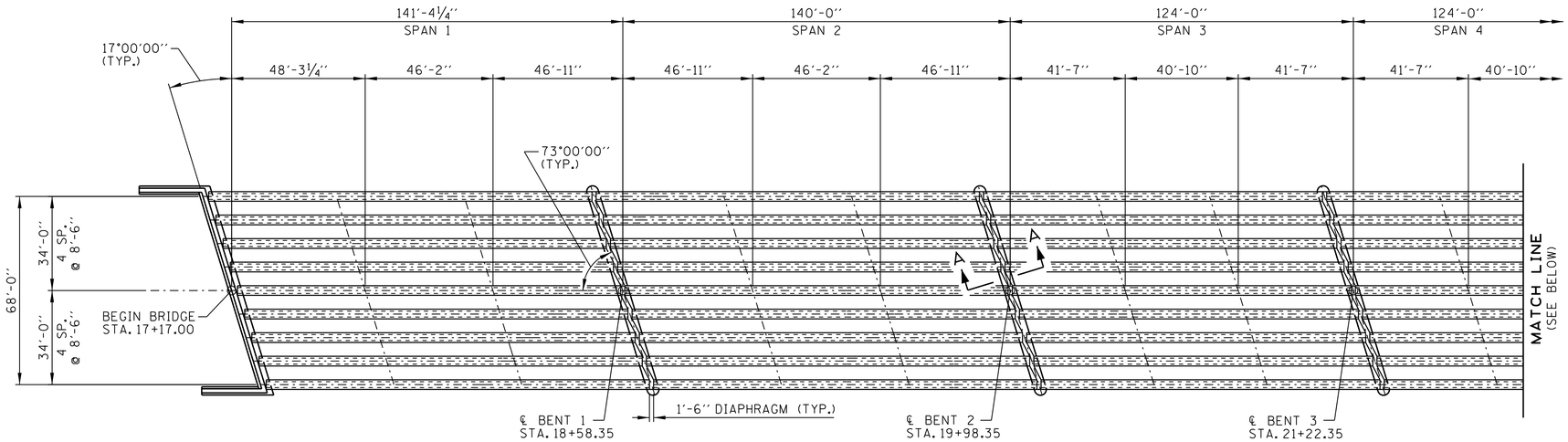

NOTE:
FOR SECTION A-A SEE DRAWING U-46-108.

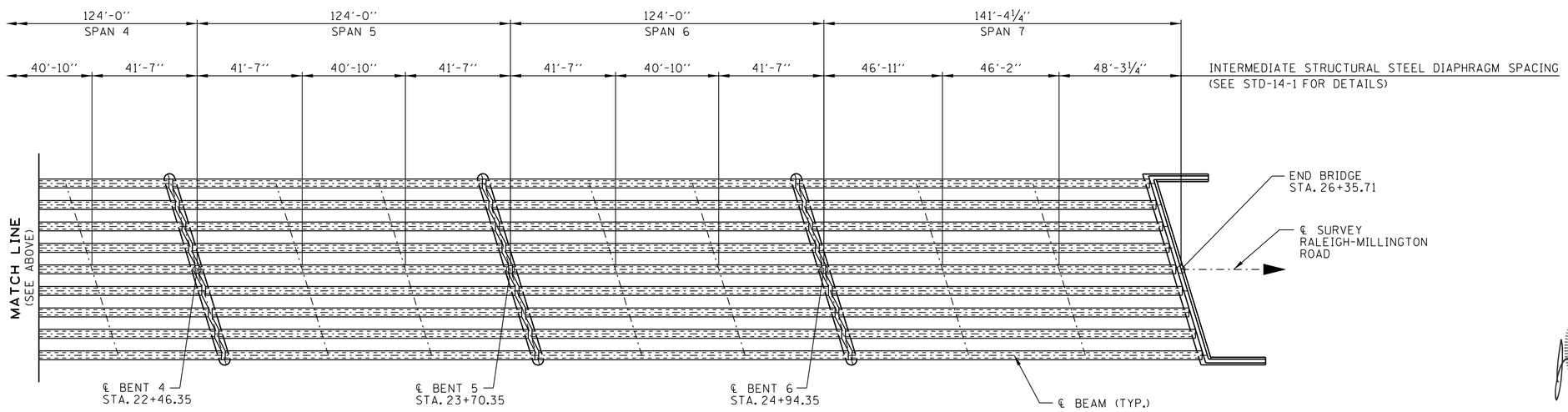

FRAMING PLAN
(SCALE 1"=25')

2030 ADT = 18,632
72'-0" ROADWAY WITH MODIFIED STD-1-ISS PARAPET
DESIGN SPEED = 50 MPH

STATE OF TENNESSEE
DEPARTMENT OF TRANSPORTATION

SUPERSTRUCTURE
FRAMING PLAN I
RALEIGH-MILLINGTON ROAD
OVER THE LOOSAHATCHIE RIVER
BRIDGE I.D. NO. 79S81030001
STATION 21+76.35
LOG MILE 3.88
SHELBY COUNTY
2013

DESIGNED BY	JOHN CROSSLIN	DATE	5/2012
DRAWN BY	MIKE BUCKNER	DATE	5/2012
SUPERVISED BY	ERIC NELSON	DATE	5/2012
CHECKED BY	BEN SHEALY	DATE	5/2012

2/5/2013 3:33:59 PM
G:\60220947 Raleigh-Millington Bridge\Cad\SS_framing.dgn

TENNESSEE D.O.T.
DESIGN DIVISION
FILE NO.

CONST. NO.

PROJECT NO.	YEAR	SHEET NO.
79054-3407-04	2013	55

REVISIONS

NO.	DATE	BY	BRIEF DESCRIPTION

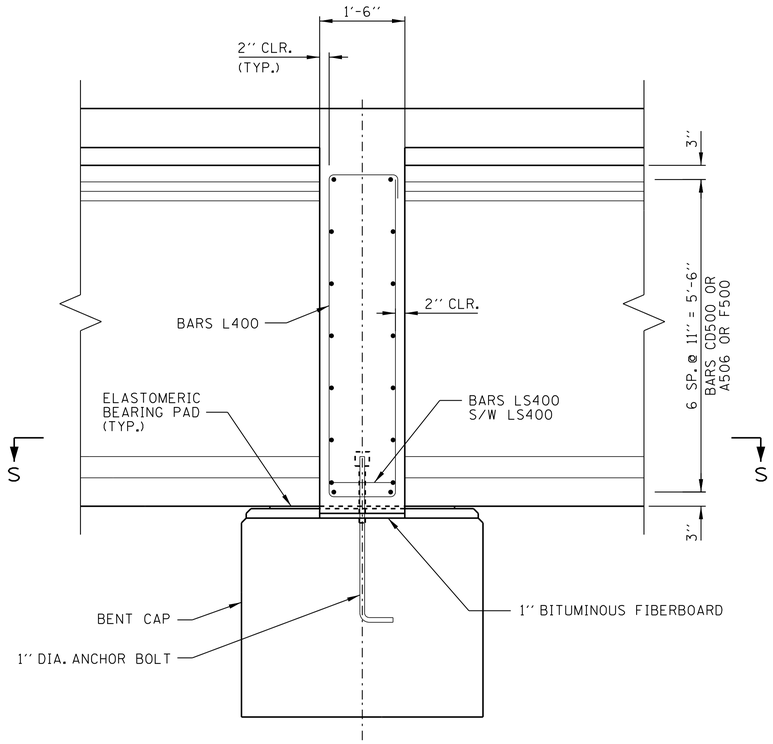

SECTION A-A
(SCALE 3/4"=1'-0")

SPECIAL NOTE FOR ANCHOR BOLTS AT BENTS:
ANCHOR BOLT ASSEMBLIES AT BENTS SHALL BE
IN ACCORDANCE WITH STANDARD DRAWING STD-6-1.

NOTE:
DIAPHRAGMS AT BENTS SHALL BE POURED
CONCURRENTLY WITH THE DECK SLAB AND
BE INCLUDED IN THE QUANTITY FOR ITEM
NO. 604-03.09.

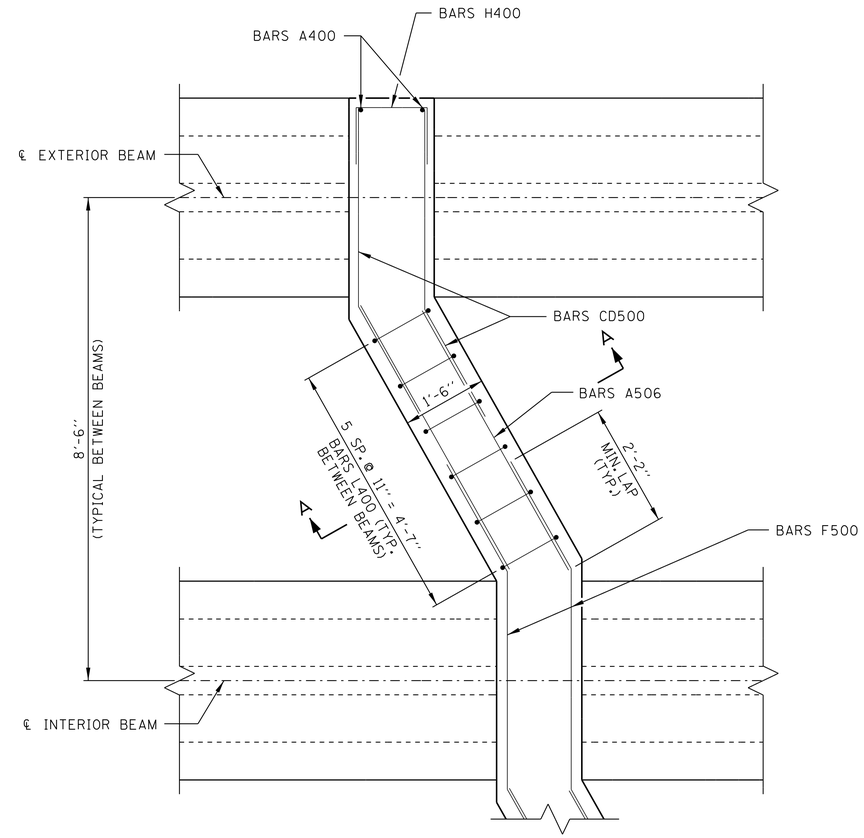

PARTIAL PLAN OF BENT DIAPHRAGM
(SCALE 3/4"=1'-0")

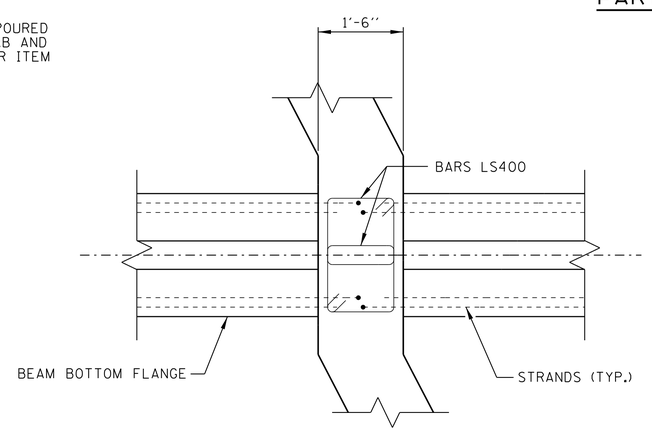

SECTION S-S
(SCALE 3/4"=1'-0")

2030 ADT = 18,632
72'-0" ROADWAY WITH MODIFIED STD-1-1SS PARAPET
DESIGN SPEED = 50 MPH

STATE OF TENNESSEE
DEPARTMENT OF TRANSPORTATION

SUPERSTRUCTURE FRAMING PLAN II
RALEIGH-MILLINGTON ROAD OVER THE LOOSAHATCHIE RIVER
BRIDGE I.D. NO. 79S81030001
STATION 21+76.35
LOG MILE 3.88
SHELBY COUNTY
2013

DESIGNED BY	JOHN CROSSLIN	DATE	5/2012
DRAWN BY	MIKE BUCKNER	DATE	5/2012
SUPERVISED BY	ERIC NELSON	DATE	5/2012
CHECKED BY	BEN SHEALY	DATE	5/2012

2/5/2013 3:34:56 PM
G:\60220947 Raleigh-Millington Bridge\Cad\SS_framing_2.dgn

TENNESSEE D.O.T.
DESIGN DIVISION
FILE NO.

CONST. NO.		
PROJECT NO.	YEAR	SHEET NO.
79054-3407-04	2013	56

REVISIONS

NO.	DATE	BY	BRIEF DESCRIPTION

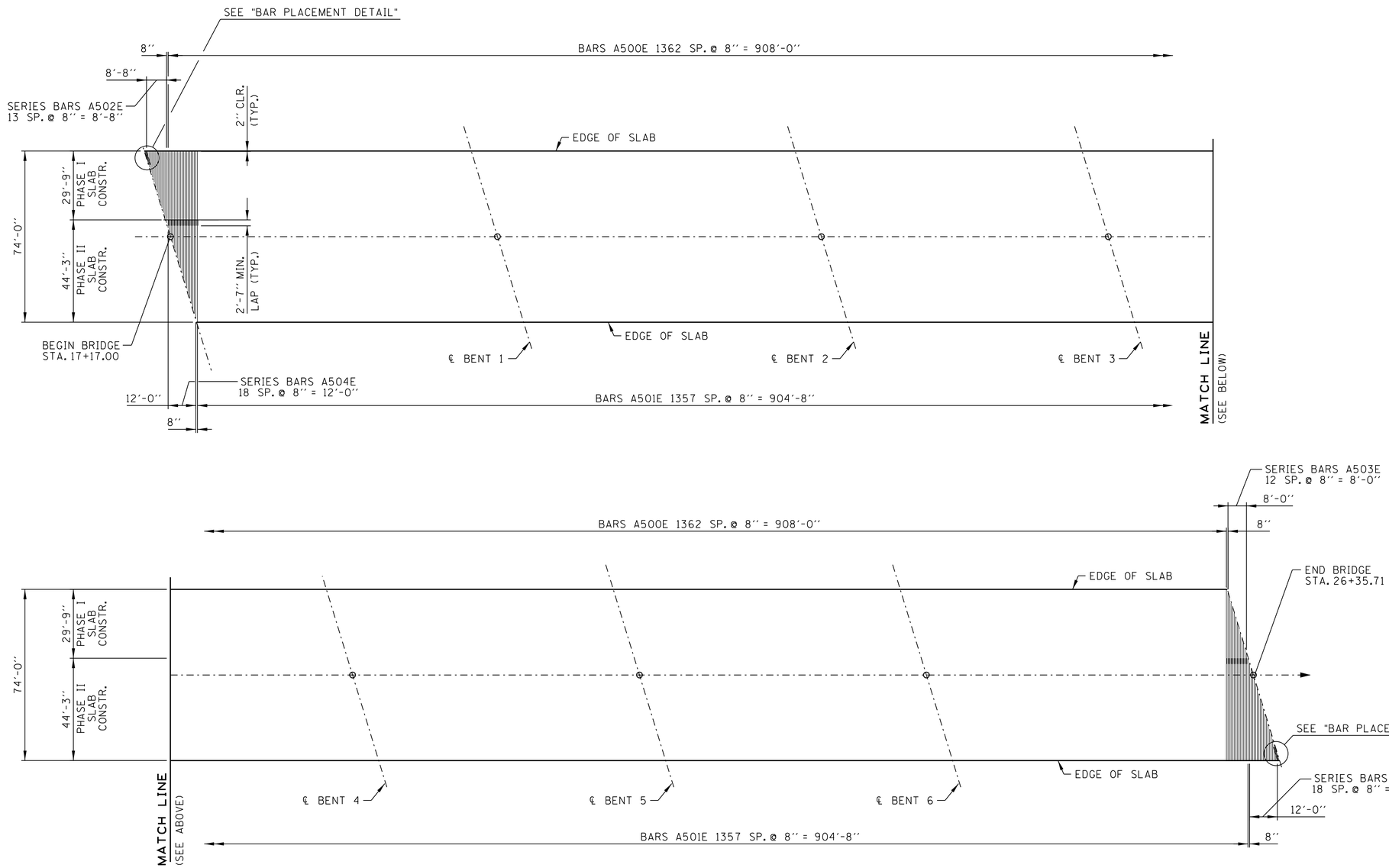

PLAN OF TRANSVERSE REINFORCING TOP AND BOTTOM OF SLAB

(FOR CLARITY, NOT ALL BARS ARE SHOWN)
(SCALE 1''=25')

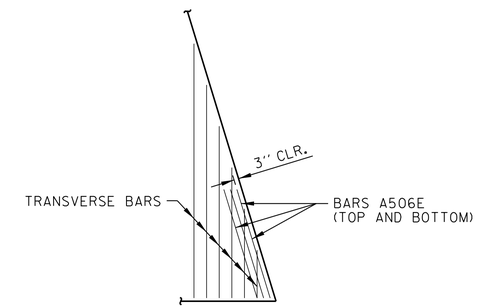

BAR PLACEMENT DETAIL

2030 ADT = 18,632
72'-0" ROADWAY WITH MODIFIED STD-1-1SS PARAPET
DESIGN SPEED = 50 MPH

STATE OF TENNESSEE
DEPARTMENT OF TRANSPORTATION

SUPERSTRUCTURE
SLAB PLAN I
RALEIGH-MILLINGTON ROAD
OVER THE LOOSAHATCHIE RIVER
BRIDGE I.D. NO. 79S81030001
STATION 21+76.35
LOG MILE 3.88
SHELBY COUNTY
2013

DESIGNED BY	JOHN CROSSLIN	DATE	5/2012
DRAWN BY	MIKE BUCKNER	DATE	5/2012
SUPERVISED BY	ERIC NELSON	DATE	5/2012
CHECKED BY	BEN SHEALY	DATE	5/2012

2/5/2013 3:38:30 PM
G:\60220947 Raleigh-Millington Bridge\Cad\SS_transv_reinf.dgn

U-46-109

TENNESSEE D.O.T.
DESIGN DIVISION
FILE NO.

CONST. NO.

PROJECT NO.	YEAR	SHEET NO.
79054-3407-04	2013	57

REVISIONS

NO.	DATE	BY	BRIEF DESCRIPTION

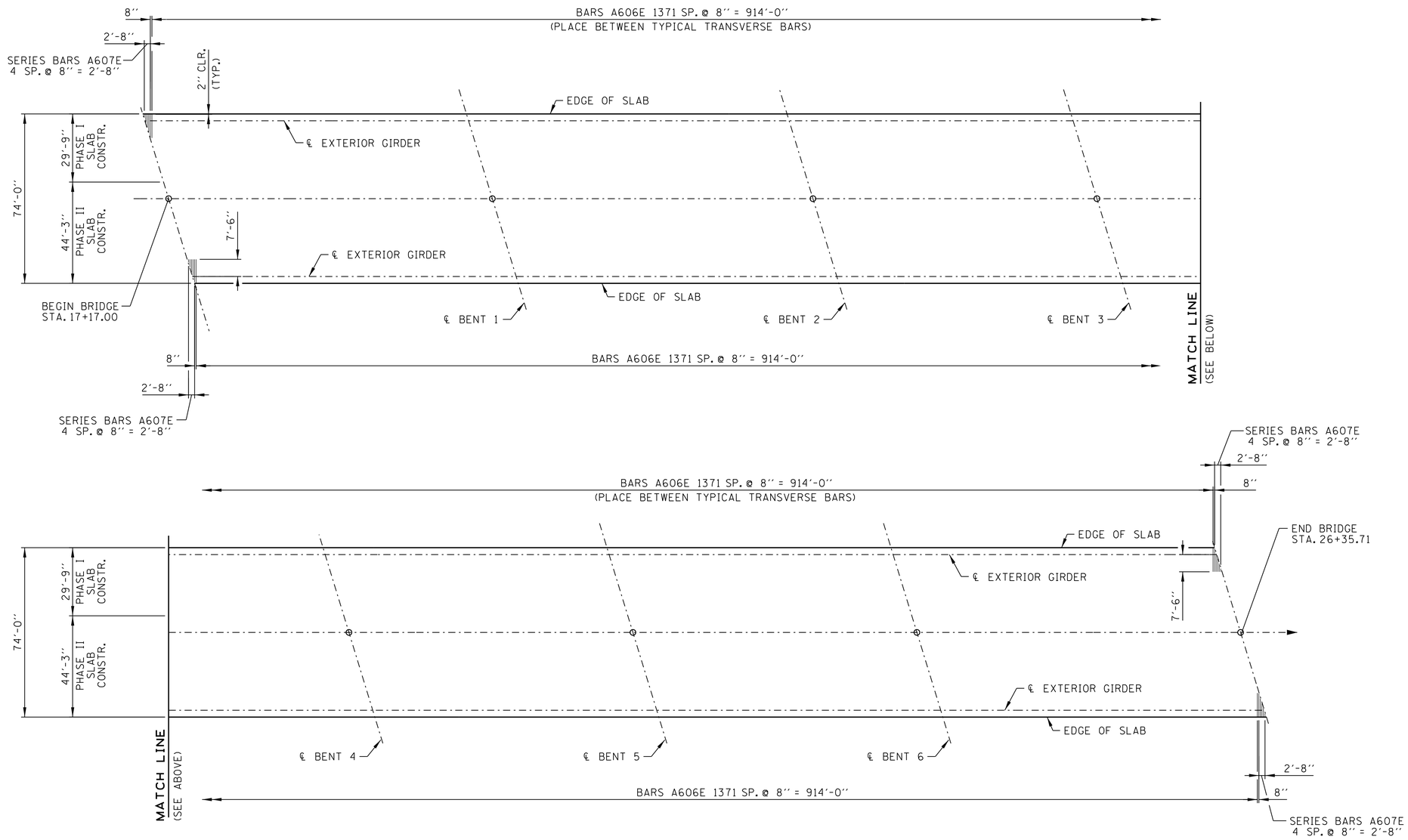

PLAN OF TRANSVERSE REINFORCING TOP OF SLAB AT OVERHANG

(FOR CLARITY, NOT ALL BARS ARE SHOWN)
(SCALE 1''=25')

2030 ADT = 18,632
72'-0" ROADWAY WITH MODIFIED STD-1-1SS PARAPET
DESIGN SPEED = 50 MPH

STATE OF TENNESSEE
DEPARTMENT OF TRANSPORTATION

SUPERSTRUCTURE
SLAB PLAN II
RALEIGH-MILLINGTON ROAD
OVER THE LOOSAHATCHIE RIVER
BRIDGE I.D. NO. 79S81030001
STATION 21+76.35
LOG MILE 3.88
SHELBY COUNTY
2013

DESIGNED BY	JOHN CROSSLIN	DATE	5/2012
DRAWN BY	MIKE BUCKNER	DATE	5/2012
SUPERVISED BY	ERIC NELSON	DATE	5/2012
CHECKED BY	BEN SHEALY	DATE	5/2012

2/5/2013 3:40:33 PM
G:\60220947 Raleigh-Millington Bridge\Cad\SS_overhang_reinf.dgn

U-46-110

TENNESSEE D.O.T.
DESIGN DIVISION
FILE NO.

CONST. NO.

PROJECT NO.	YEAR	SHEET NO.
79054-3407-04	2013	58

REVISIONS

NO.	DATE	BY	BRIEF DESCRIPTION

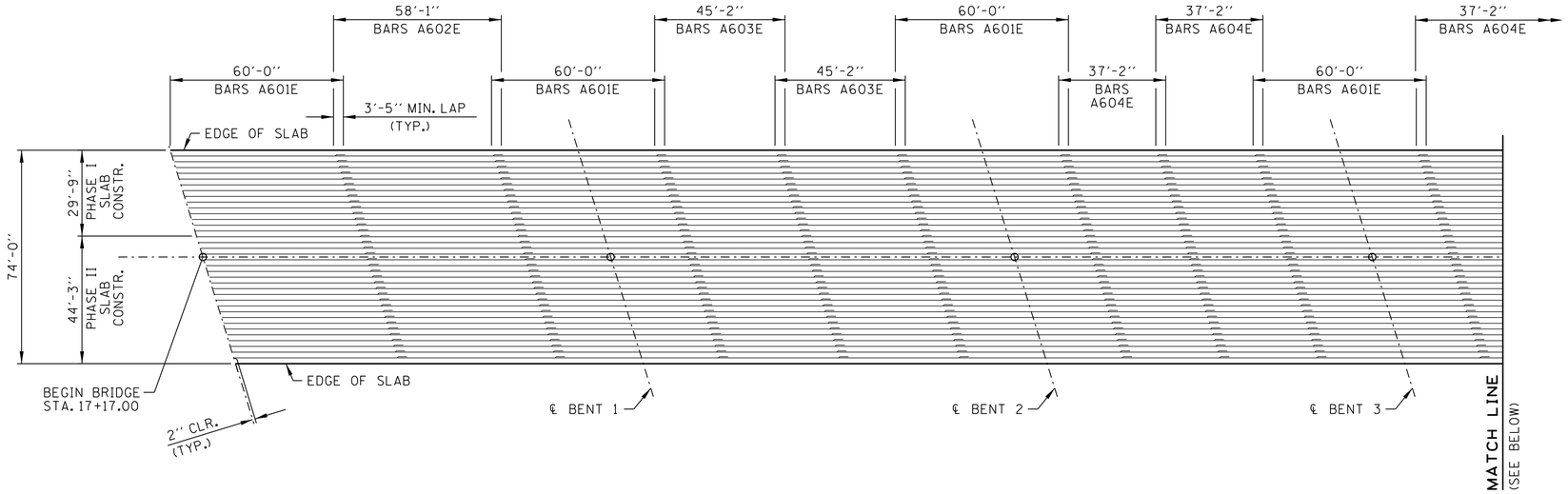

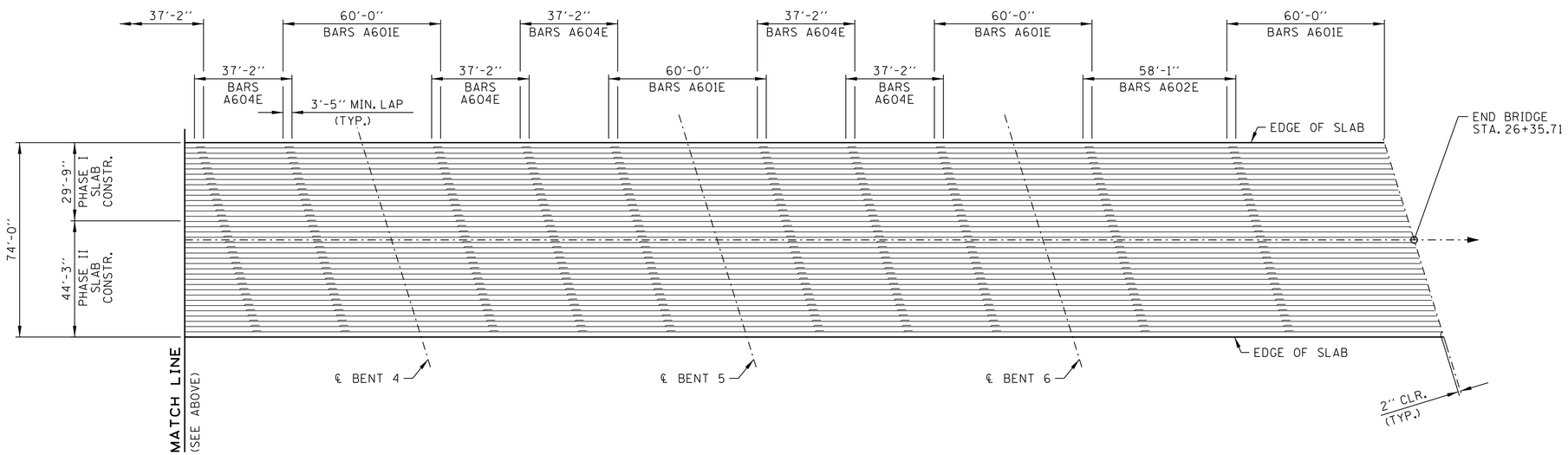

PLAN OF MAIN REINFORCING IN BOTTOM OF SLAB
(FOR CLARITY, NOT ALL BARS ARE SHOWN)
(SCALE 1"=25')

2030 ADT = 18,632
72'-0" ROADWAY WITH MODIFIED STD-1-1SS PARAPET
DESIGN SPEED = 50 MPH

STATE OF TENNESSEE
DEPARTMENT OF TRANSPORTATION

SUPERSTRUCTURE
MAIN REINFORCING PLAN I
RALEIGH-MILLINGTON ROAD
OVER THE LOOSAHATCHIE RIVER
BRIDGE I.D. NO. 79S81030001
STATION 21+76.35
LOG MILE 3.88
SHELBY COUNTY
2013

DESIGNED BY	JOHN CROSSLIN	DATE	5/2012
DRAWN BY	MIKE BUCKNER	DATE	5/2012
SUPERVISED BY	ERIC NELSON	DATE	5/2012
CHECKED BY	BEN SHEALY	DATE	5/2012

U-46-111

2/5/2013 3:39:41PM
G:\60220947 Raleigh-Millington Bridge\Cad\SS_long_reif_bottom.dgn

TENNESSEE D.O.T.
DESIGN DIVISION
FILE NO.

CONST. NO.

PROJECT NO.	YEAR	SHEET NO.
79054-3407-04	2013	59

REVISIONS

NO.	DATE	BY	BRIEF DESCRIPTION

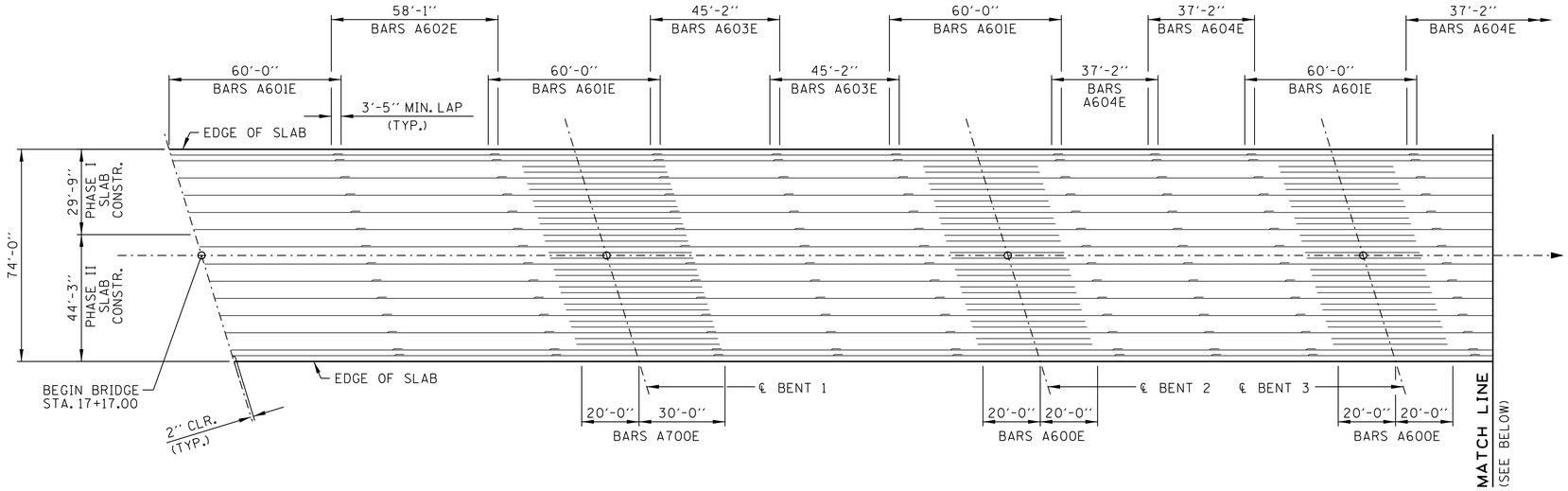

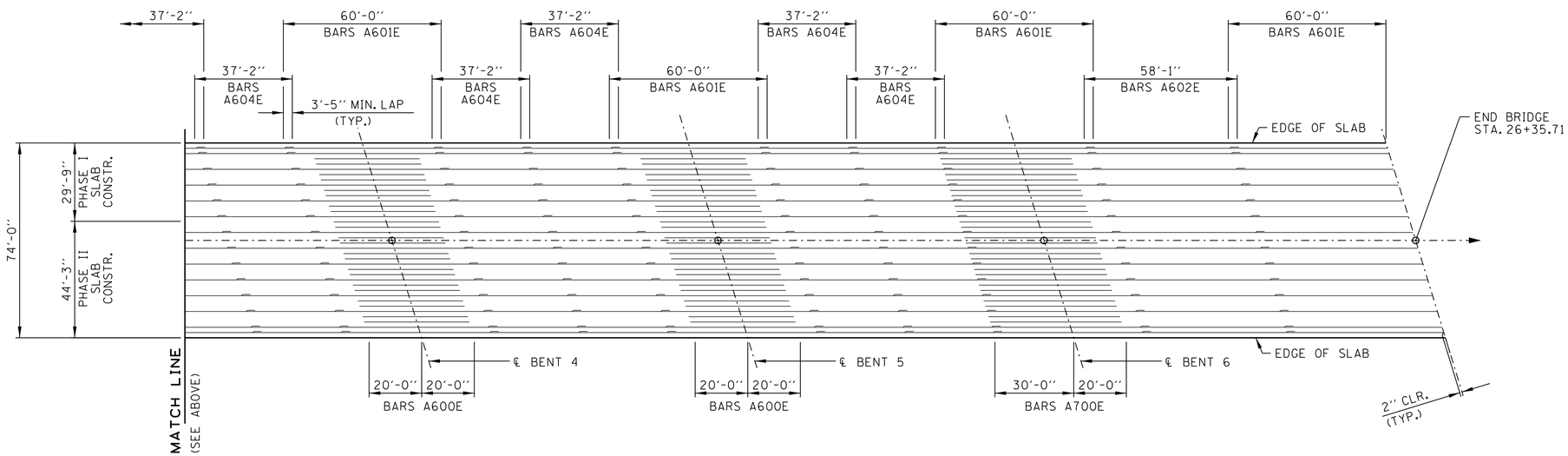

PLAN OF MAIN REINFORCING IN TOP OF SLAB
(FOR CLARITY, NOT ALL BARS ARE SHOWN)
(SCALE 1"=25')

2030 ADT = 18,632
72'-0" ROADWAY WITH MODIFIED STD-1-1SS PARAPET
DESIGN SPEED = 50 MPH

STATE OF TENNESSEE
DEPARTMENT OF TRANSPORTATION

SUPERSTRUCTURE
MAIN REINFORCING PLAN II
RALEIGH-MILLINGTON ROAD
OVER THE LOOSAHATCHIE RIVER
BRIDGE I.D. NO. 79S81030001
STATION 21+76.35
LOG MILE 3.88
SHELBY COUNTY
2013

DESIGNED BY	JOHN CROSSLIN	DATE	5/2012
DRAWN BY	MIKE BUCKNER	DATE	5/2012
SUPERVISED BY	ERIC NELSON	DATE	5/2012
CHECKED BY	BEN SHEALY	DATE	5/2012

2/5/2013 3:39:52 PM
G:\60220947 Raleigh-Millington Bridge\Cad\SS_long_reinf_top.dgn

U-46-112

TENNESSEE D.O.T.
DESIGN DIVISION
FILE NO.

CONST. NO.

PROJECT NO.	YEAR	SHEET NO.
79054-3407-04	2013	60

REVISIONS

NO.	DATE	BY	BRIEF DESCRIPTION

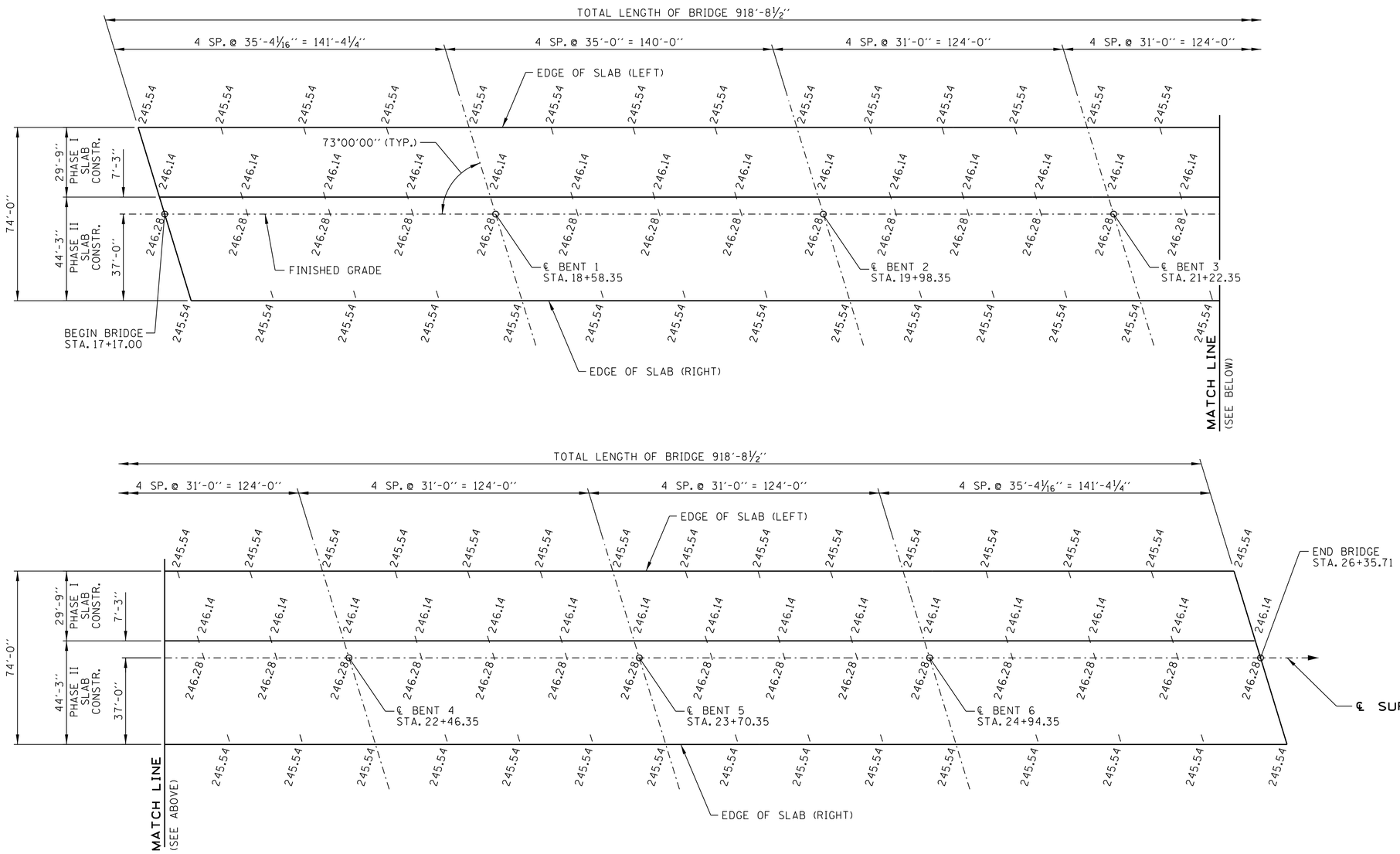

SCREED ELEVATIONS
(SCALE 1"=25')

2030 ADT = 18,632
72'-0" ROADWAY WITH MODIFIED STD-1-1SS PARAPET
DESIGN SPEED = 50 MPH

STATE OF TENNESSEE
DEPARTMENT OF TRANSPORTATION

FINISH GRADE ELEVATIONS
RALEIGH-MILLINGTON ROAD
OVER THE LOOSAHATCHIE RIVER
BRIDGE I.D. NO. 79S81030001
STATION 21+76.35
LOG MILE 3.88
SHELBY COUNTY
2013

DESIGNED BY	JOHN CROSSLIN	DATE	5/2012
DRAWN BY	MIKE BUCKNER	DATE	5/2012
SUPERVISED BY	ERIC NELSON	DATE	5/2012
CHECKED BY	BEN SHEALY	DATE	5/2012

2/5/2013 3:39:33 PM
G:\60220947 Raleigh-Millington Bridge\Cad\Screed Elev.dgn

TENNESSEE D.O.T.
DESIGN DIVISION
FILE NO.

CONST. NO.

PROJECT NO.	YEAR	SHEET NO.
79054-3407-04	2013	61

REVISIONS

NO.	DATE	BY	BRIEF DESCRIPTION

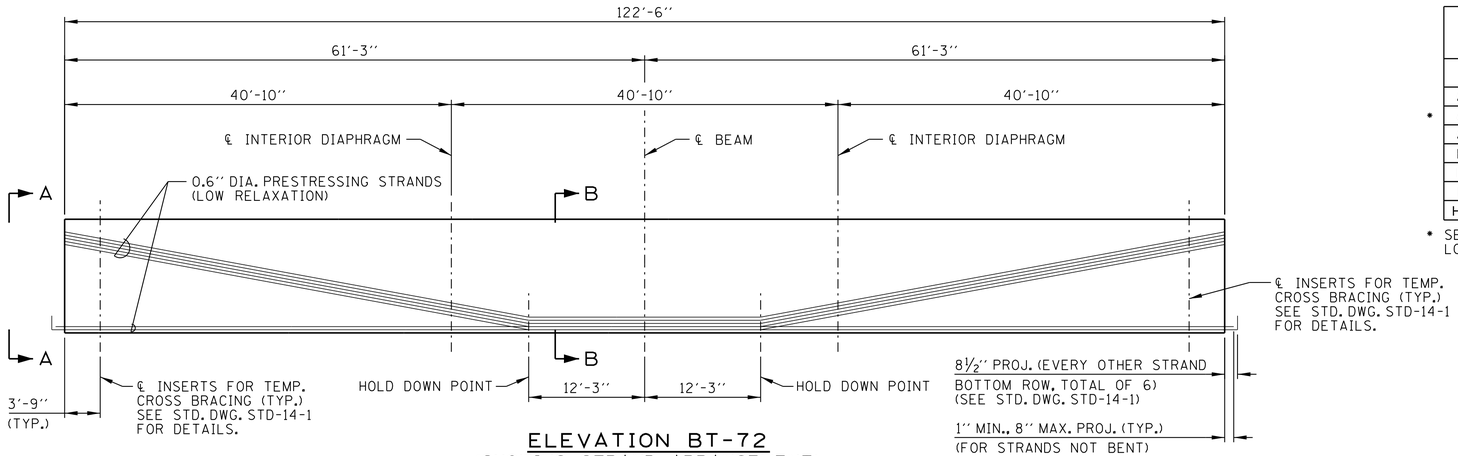

ELEVATION BT-72
(SHOWING STRAND ARRANGEMENT)

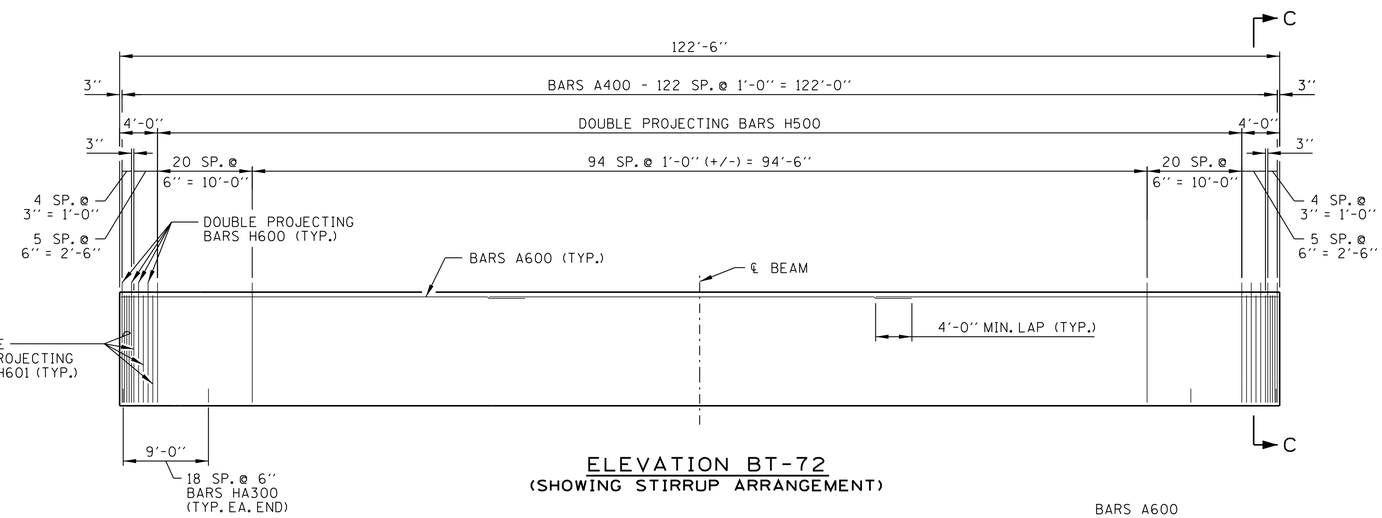

ELEVATION BT-72
(SHOWING STIRRUP ARRANGEMENT)

BILL OF STEEL PER BEAM

BAR	SIZE	NO. REQ'D	LENGTH
A400	4	123	3'-2"
* A500	5	8	5'-6"
A600	6	18	43'-6"
H500	5	270	7'-8½"
H600	6	16	7'-8½"
H601	6	24	7'-1"
HA300	3	38	4'-7"

* SEE STD. DWG. STD-14-1 FOR LOCATION OF A500 BARS

PRESTRESSED BEAM DESIGN DATA - PER BEAM

LIVE LOAD DISTRIBUTION FACTOR: FOR SHEAR = 0.849 FOR MOMENT = 0.701
COMPOSITE DEAD LOAD: 400 LB/FT
COMPOSITE SLAB DESIGN STRENGTH: f'c = 3500 PSI
NOTE: DOWNWARD DEFLECTION UNDER TOTAL DL IS NOT ALLOWED.

NOTES:

1. SEE STD-14-1 FOR BULB-TEE STANDARD DETAILS AND NOTES.
2. THE CONCRETE FOR THIS CONSTRUCTION SHALL BE OF SUCH PROPERTIES AS TO ATTAIN A COMPRESSIVE STRENGTH OF NOT LESS THAN 10,000 PSI AT THE AGE OF 28 DAYS AND STRESS TRANSFER SHALL NOT BE MADE TO THE BRIDGE MEMBER UNTIL THE TEST SPECIMENS INDICATE THAT THE CONCRETE HAS REACHED A COMPRESSIVE STRENGTH OF AT LEAST 7,000 PSI. SEE GENERAL NOTES FOR CONCRETE FINISHING NOTES.
3. ALL BEAMS ARE BT-72.
4. ALL STRANDS ARE 0.6" DIA. 270K LOW RELAXATION PRESTRESSING STRANDS. INITIAL PULL = 43,900 LBS.
5. MINIMUM AGE OF BEAMS AT TIME OF POURING SLAB SHALL BE 90 DAYS.

ESTIMATED QUANTITIES - PER BEAM

NO. BEAMS REQ'D	PRESTRESSING STRANDS 0.6" DIA. (LOW RELAXATION) LB.	CLASS "A" CONCRETE C.Y.	REINFORCING STEEL LB.
36	2767	24.2	4159

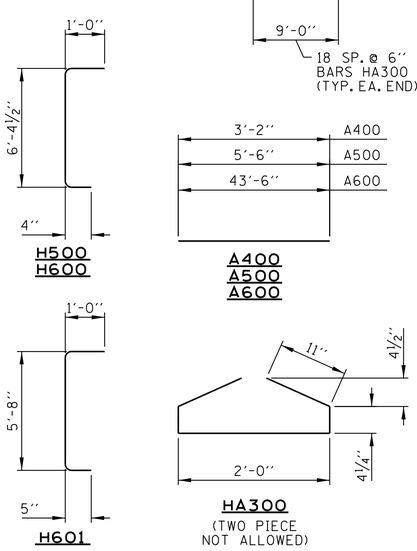

⊕ DENOTES BOND BREAK 4'-0" FROM END
▲ DENOTES BOND BREAK 7'-0" FROM END

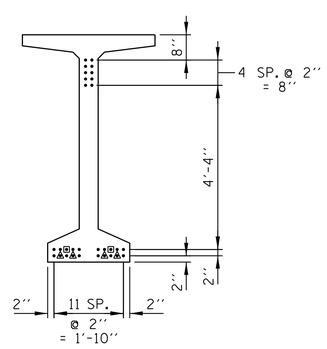

SECTION A-A
(SCALE ½"=1'-0")
(30 STRANDS TOTAL)

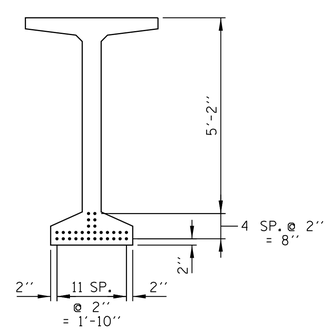

SECTION B-B
(SCALE ½"=1'-0")
(30 STRANDS TOTAL)

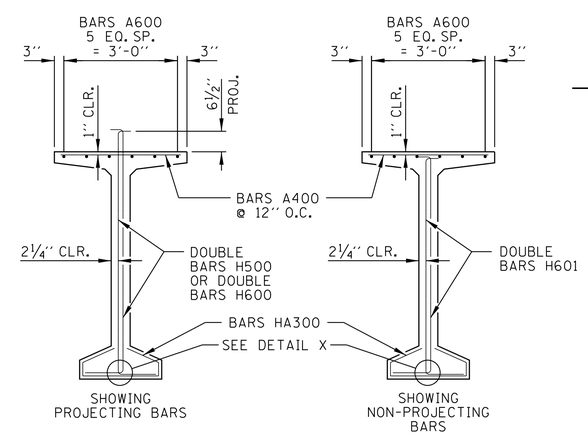

SECTION C-C
(SCALE ½"=1'-0")

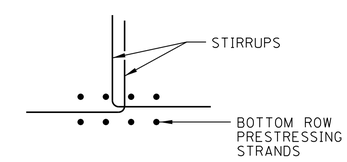

DETAIL X
N.T.S.

2030 ADT = 18,632
72'-0" ROADWAY WITH MODIFIED STD-1-1SS PARAPET
DESIGN SPEED = 50 MPH

STATE OF TENNESSEE
DEPARTMENT OF TRANSPORTATION

PRESTRESSED BEAM DETAILS
SPANS 3, 4, 5 & 6
RALEIGH-MILLINGTON ROAD
OVER THE LOOSAHATCHIE RIVER
BRIDGE I.D. NO. 79S81030001
STATION 21+76.35
LOG MILE 3.88
SHELBY COUNTY
2013

DESIGNED BY	JOHN CROSSLIN	DATE	5/22/2021
DRAWN BY	MIKE BUCKNER	DATE	5/22/2021
SUPERVISED BY	ERIC NELSON	DATE	5/22/2021
CHECKED BY	BRIAN SMELASON	DATE	5/22/2021

2/5/2013 3:41:57 PM
G:\6022094 7 Raleigh-Millington Bridge\Cad\SS_girder_3456.dgn

U-46-114

TENNESSEE D.O.T.
DESIGN DIVISION
FILE NO.

CONST. NO.

PROJECT NO.	YEAR	SHEET NO.
79054-3407-04	2013	62

REVISIONS

NO.	DATE	BY	BRIEF DESCRIPTION

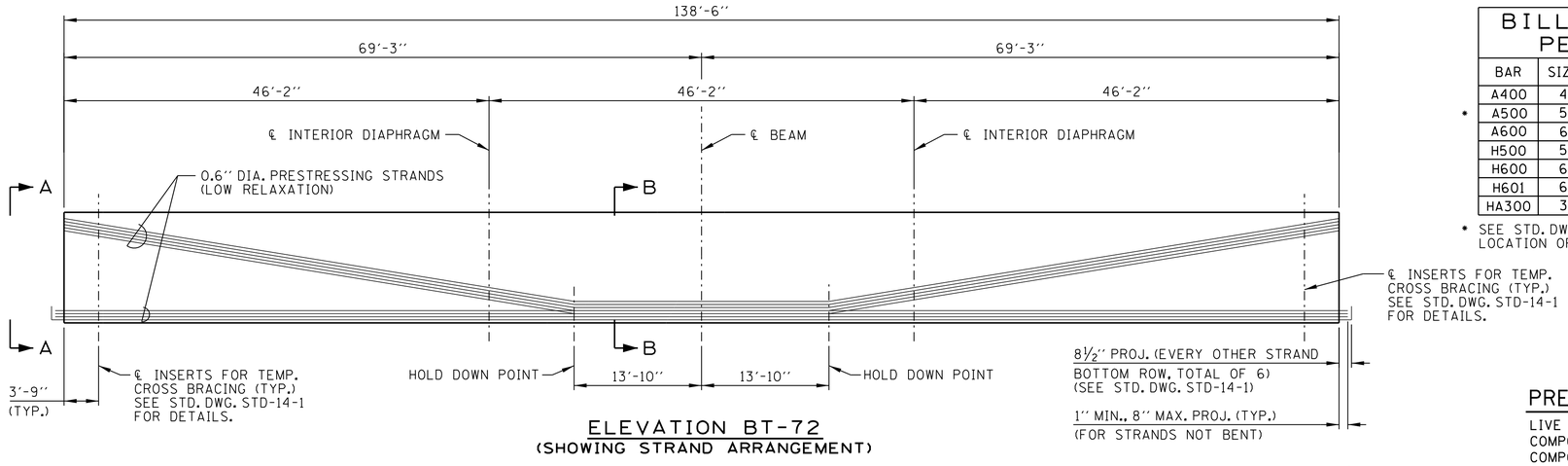

ELEVATION BT-72
(SHOWING STRAND ARRANGEMENT)

BILL OF STEEL PER BEAM			
BAR	SIZE	NO. REQ'D	LENGTH
A400	4	139	3'-2"
* A500	5	8	5'-6"
A600	6	24	37'-9"
H500	5	324	7'-8½"
H600	6	16	7'-8½"
H601	6	24	7'-1"
HA300	3	38	4'-7"

* SEE STD. DWG. STD-14-1 FOR LOCATION OF A500 BARS

PRESTRESSED BEAM DESIGN DATA - PER BEAM

LIVE LOAD DISTRIBUTION FACTOR: FOR SHEAR = 0.849 FOR MOMENT = 0.701
COMPOSITE DEAD LOAD: 400 LB/FT
COMPOSITE SLAB DESIGN STRENGTH: f'c = 3500 PSI
NOTE: DOWNWARD DEFLECTION UNDER TOTAL DL IS NOT ALLOWED.

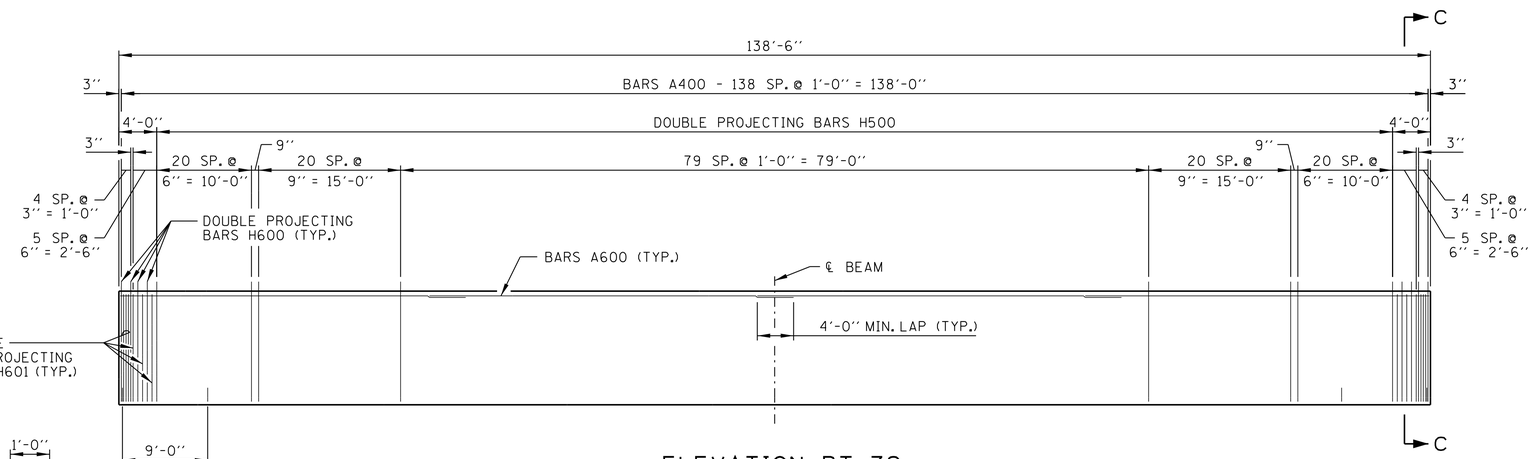

ELEVATION BT-72
(SHOWING STIRRUP ARRANGEMENT)

NOTES:

1. SEE STD-14-1 FOR BULB-TEE STANDARD DETAILS AND NOTES.
2. THE CONCRETE FOR THIS CONSTRUCTION SHALL BE OF SUCH PROPERTIES AS TO ATTAIN A COMPRESSIVE STRENGTH OF NOT LESS THAN 10,000 PSI AT THE AGE OF 28 DAYS AND STRESS TRANSFER SHALL NOT BE MADE TO THE BRIDGE MEMBER UNTIL THE TEST SPECIMENS INDICATE THAT THE CONCRETE HAS REACHED A COMPRESSIVE STRENGTH OF AT LEAST 7,000 PSI. SEE GENERAL NOTES FOR CONCRETE FINISHING NOTES.
3. ALL BEAMS ARE BT-72.
4. ALL STRANDS ARE 0.6" DIA. 270K LOW RELAXATION PRESTRESSING STRANDS. INITIAL PULL = 43,900 LBS.
5. MINIMUM AGE OF BEAMS AT TIME OF POURING SLAB SHALL BE 90 DAYS.

ESTIMATED QUANTITIES - PER BEAM			
NO. BEAMS REQ'D	PRESTRESSING STRANDS 0.6" DIA. (LOW RELAXATION) LB.	CLASS "A" CONCRETE C.Y.	REINFORCING STEEL LB.
27	4374	27.3	4812

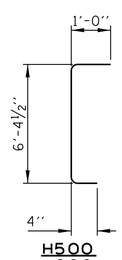

H500
H600

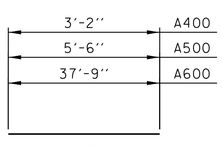

A400
A500
A600

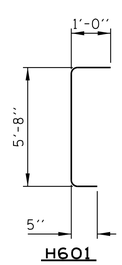

H601

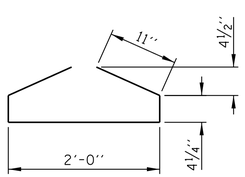

HA300
(TWO PIECE NOT ALLOWED)

⊞ DENOTES BOND BREAK 4'-0" FROM END
⊠ DENOTES BOND BREAK 7'-0" FROM END

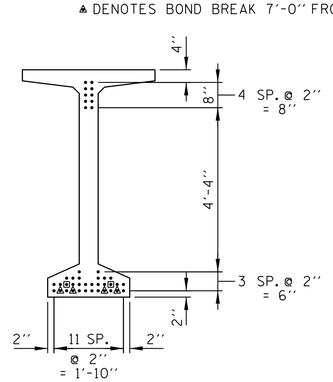

SECTION A-A
(SCALE ½"=1'-0")
(42 STRANDS TOTAL)

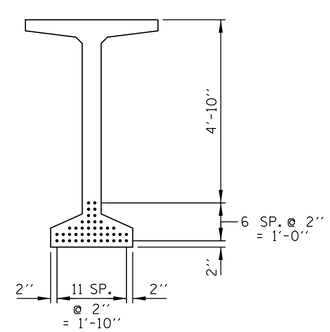

SECTION B-B
(SCALE ½"=1'-0")
(42 STRANDS TOTAL)

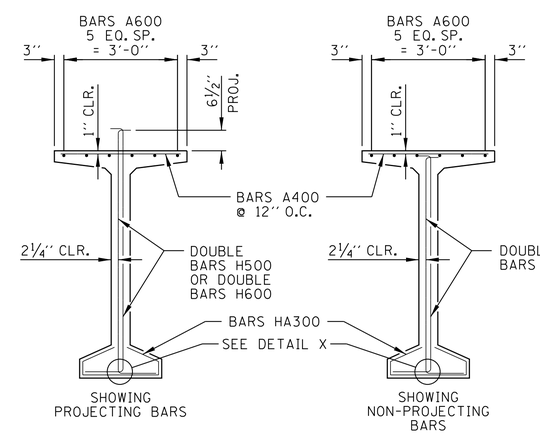

SECTION C-C
(SCALE ½"=1'-0")

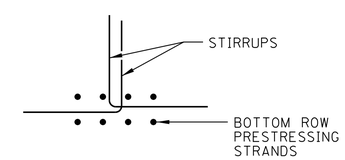

DETAIL X
N.T.S.

2030 ADT = 18,632
72'-0" ROADWAY WITH MODIFIED STD-1-1SS PARAPET
DESIGN SPEED = 50 MPH

STATE OF TENNESSEE
DEPARTMENT OF TRANSPORTATION

PRESTRESSED BEAM DETAILS
SPANS 1, 2 & 7
RALEIGH-MILLINGTON ROAD
OVER THE LOOSAHATCHIE RIVER
BRIDGE I.D. NO. 79S81030001
STATION 21+76.35
LOG MILE 3.88
SHELBY COUNTY
2013

DESIGNED BY	JOHN CROSSLIN	DATE	5/22/2021
DRAWN BY	MIKE BUCKNER	DATE	5/22/2021
SUPERVISED BY	ERIC NELSON	DATE	5/22/2021
CHECKED BY	BRENC SMELLASON	DATE	5/22/2021

2/5/2013 3:41:10 PM
G:\60220947 Raleigh-Millington Bridge\Cad\SS_girder_127.dgn

U-46-115

TENNESSEE D.O.T.
DESIGN DIVISION
FILE NO.

ABUTMENT 1 AND 2 NOTES

1. RISER BLOCKS TO BE POURED MONOLITHICALLY WITH ABUTMENT BEAM.
2. WHEN POURING WINGWALLS, PROVISIONS SHALL BE MADE FOR SETTING REINFORCING STEEL FOR WINGPOST AND PARAPETS. FOR DETAILS OF WINGPOST AND PARAPET SEE STD. DWG. STD-1-1SS.
3. RISER BLOCK BEARING PAD SURFACE TO CONFORM TO BOTTOM OF BEAM GRADE.
4. COST OF BRIDGERAIL AND POST IS TO BE INCLUDED IN THE UNIT PRICE BID FOR BRIDGERAIL SYSTEM.
5. ELASTOMERIC PADS SHALL BE IN PLACE A MINIMUM OF ONE DAY BEFORE SETTING BEAMS. PLACE RUBBER BONDING CEMENT IN SUCH A WAY THAT VISIBLE CONCRETE SURFACES WILL NOT BE STAINED.
6. SEE STD. DWG. STD-6-1 FOR PILE DETAILS AND NOTES.
7. NOT LESS THAN HALF OF THE SLAB IN THE END SPAN SHALL BE POURED PRIOR TO OR CONCURRENTLY WITH PLACEMENT OF ANY PART OF THE ABUTMENT BACKWALL. AT LEAST THE TOP 12 INCHES OF THE BACKWALL SHALL BE POURED CONCURRENTLY WITH THE END OF SLAB.
8. WINGBEAM PILES SHALL BE DRIVEN TO THE PLAN TIP ELEVATION OR REFUSAL. SEISMIC ATTACHMENT IS NOT REQUIRED FOR WINGBEAM PILES.
9. ENDWALL AND WINGWALL CONCRETE MAY BE EITHER CLASS 'A' OR CLASS 'D' BUT IN ANY CASE IS TO BE INCLUDED IN ABUTMENT CONCRETE AS CLASS 'A'. TOP 12 INCHES OF ENDWALL TO BE INCLUDED IN ABUTMENT CONCRETE.
10. SEE DWG. U-46-118 FOR VIEWS A-A AND B-B AND SECTION C-C. SEE DWG. U-46-120 FOR SECTION D-D.
11. ALL PILES ARE HP 14X73.
12. RELOCATION/INSTALLATION OF 20" DIAMETER DUCTILE IRON PIPE WATER LINE TO BE COMPLETED BY OTHERS (MLGW). CONTRACTOR SHALL INSTALL STEEL CASING PIPE FOR WATER LINE THROUGH ABUTMENT BACKWALL IN COORDINATION WITH MLGW REQUIREMENTS, EXTENDING 5'-0" BEYOND THE END OF THE APPROACH SLAB. COST OF CASING SHALL BE CONSIDERED INCIDENTAL TO THE COST OF OTHER ITEMS.
13. EXACT LOCATION AND SIZE OF OPENING IN ABUTMENT FOR STEEL CASING PIPE SHALL BE DETERMINED BY CONTRACTOR IN COORDINATION WITH MLGW REQUIREMENTS AND SUBMITTED TO ENGINEER FOR APPROVAL. OPENING IN ABUTMENT SHALL BE SEALED WITH CONCRETE OR MORTAR AFTER TIGHTLY WRAPPING PIPE WITH TWO LAYERS OF 15 LB. BUILDING PAPER.

CONST. NO.

PROJECT NO.	YEAR	SHEET NO.
79054-3407-04	2013	63

REVISIONS

NO.	DATE	BY	BRIEF DESCRIPTION

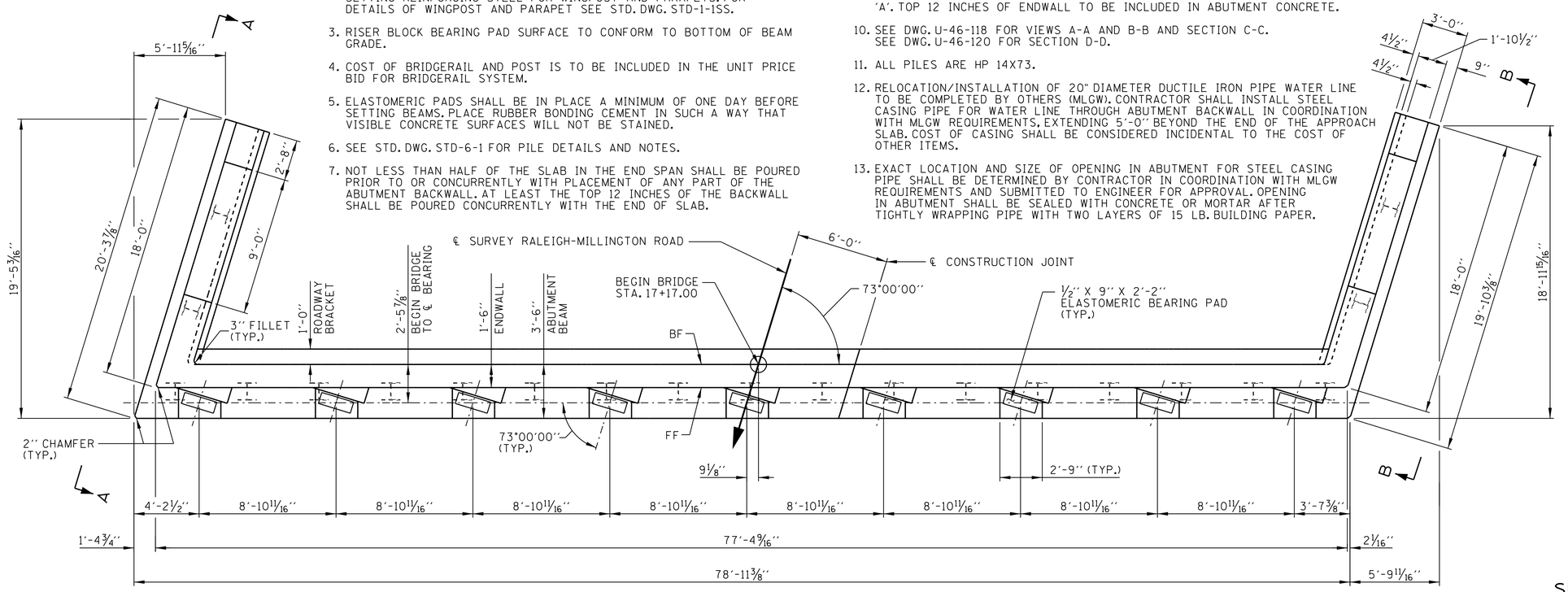

PLAN
(SCALE 1/4"=1'-0")

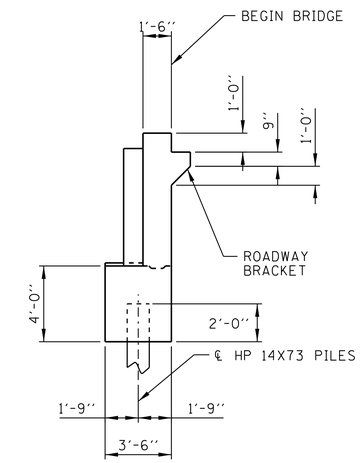

SECTION THRU ABUTMENT
(SCALE 1/4"=1'-0")

PILE CUT-OFF ELEVATIONS																
A	B	C	D	E	F	G	H	I	J	K	L	M	N	O	P	Q
236.36	236.44	236.53	236.62	236.71	236.80	236.89	236.98	237.07	236.98	236.89	236.80	236.71	236.62	236.53	236.44	236.36

ESTIMATED QUANTITIES		
CLASS 'A' CONCRETE (BRIDGES) C.Y.	STEEL BAR REINFORCING (BRIDGES) LB.	EPOXY COATED REINFORCING STEEL (BRIDGES) LB.
103	3,573	12,962

CONSTRUCTION NOTE:

PRIOR TO THE START OF CONSTRUCTION THE CONTRACTOR SHALL EXPOSE EXISTING UTILITIES IN THE AREAS WHERE PILES ARE TO BE DRIVEN.

PROPOSED PILES MAY BE SHIFTED UP TO 1'-6" (MAXIMUM CENTER-TO-CENTER SPACING OF ADJACENT PILES SHALL BE 6'-2") TO AVOID THE EXISTING WATER LINE.

IF IT IS NECESSARY TO SHIFT THE PROPOSED PILES MORE THAN 1'-6", CONTACT THE ENGINEER OF RECORD FOR DIRECTION.

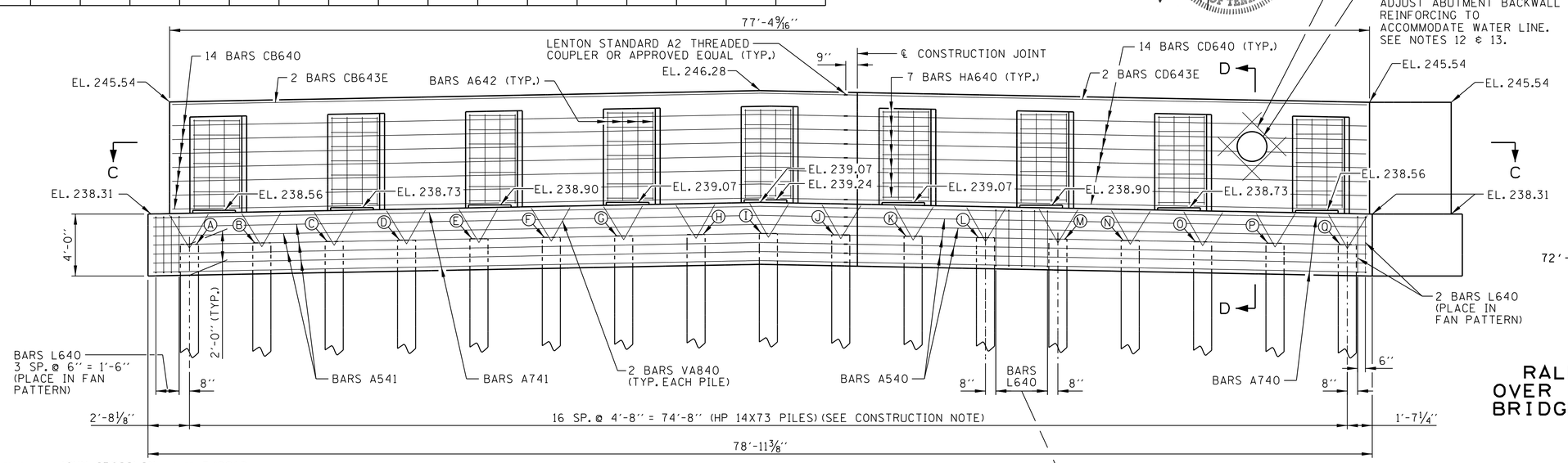

ELEVATION
(SCALE 1/4"=1'-0")

2030 ADT = 18,632
72'-0" ROADWAY WITH MODIFIED STD-1-1SS PARAPET
DESIGN SPEED = 50 MPH

STATE OF TENNESSEE
DEPARTMENT OF TRANSPORTATION

ABUTMENT 1 LAYOUT
RALEIGH-MILLINGTON ROAD OVER THE LOOSAHATCHIE RIVER
BRIDGE I.D. NO. 79S81030001
STATION 21+76.35
LOG MILE 3.88
SHELBY COUNTY
2013

DESIGNED BY	JOHN CROSSLIN	DATE	5/2012
DRAWN BY	MIKE BUCKNER	DATE	5/2012
SUPERVISED BY	ERIC NELSON	DATE	5/2012
CHECKED BY	BEN SHEALY	DATE	5/2012

2/5/2013 3:52:16 PM
G:\60220947 Raleigh-Millington Bridge\Cad\AbutmentILayout.dgn

U-46-116

TENNESSEE D.O.T.
DESIGN DIVISION
FILE NO.

NOTES

1. SEE DWG. U-46-118 FOR VIEW AA AND VIEW B-B.
   SEE DWG. U-46-120 FOR SECTION D-D.
   SEE DWG. U-46-119 FOR SECTION F-F.
2. SEE DWG. U-46-116 FOR ABUTMENT NOTES.

CONST. NO.		
PROJECT NO.	YEAR	SHEET NO.
79054-3407-04	2013	64

REVISIONS

NO.	DATE	BY	BRIEF DESCRIPTION

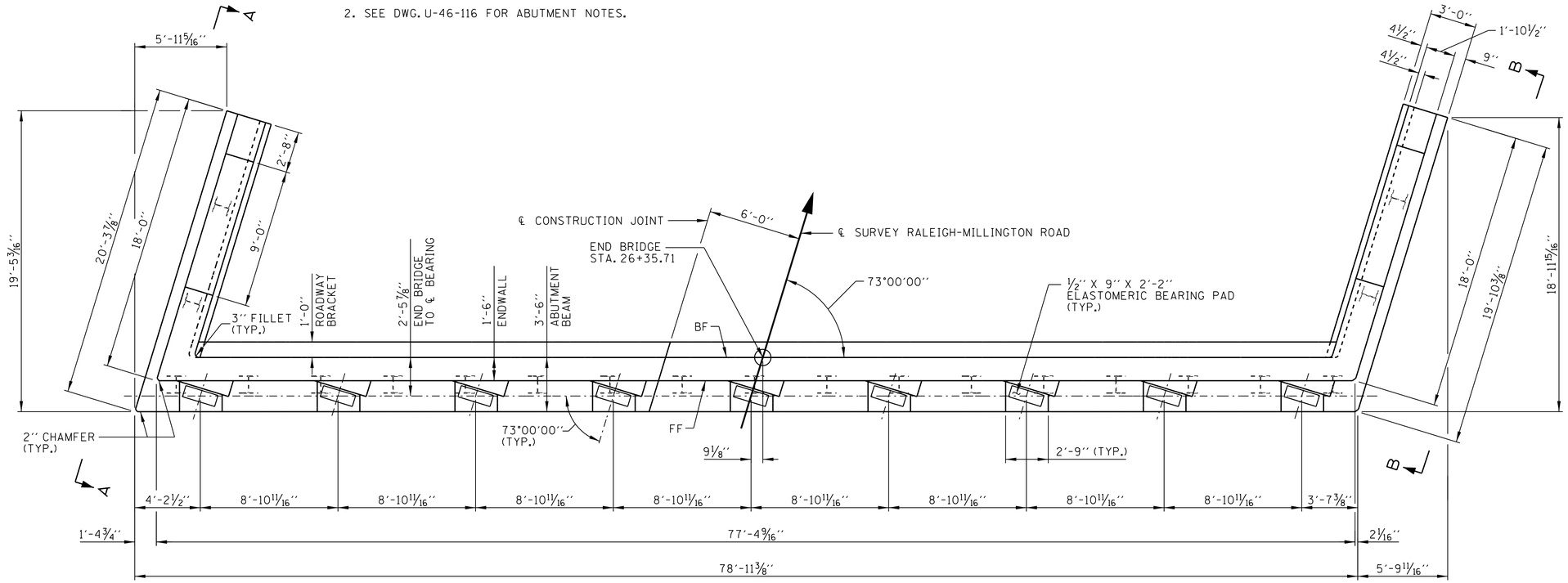

PLAN
(SCALE 1/4"=1'-0")

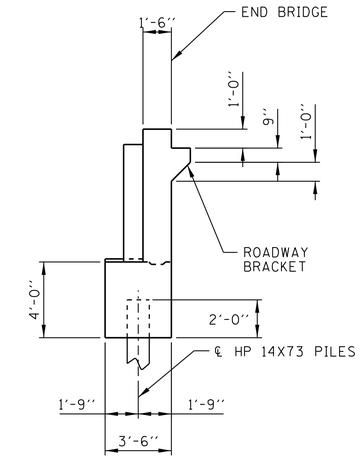

SECTION THRU ABUTMENT
(SCALE 1/4"=1'-0")

PILE CUT-OFF ELEVATIONS																
A	B	C	D	E	F	G	H	I	J	K	L	M	N	O	P	Q
236.36	236.44	236.53	236.62	236.71	236.80	236.89	236.98	237.07	236.98	236.89	236.80	236.71	236.62	236.53	236.44	236.36

ESTIMATED QUANTITIES		
CLASS 'A' CONCRETE (BRIDGES) C.Y.	STEEL BAR REINFORCING (BRIDGES) LB.	EPOXY COATED REINFORCING STEEL (BRIDGES) LB.
103	3,573	12,962

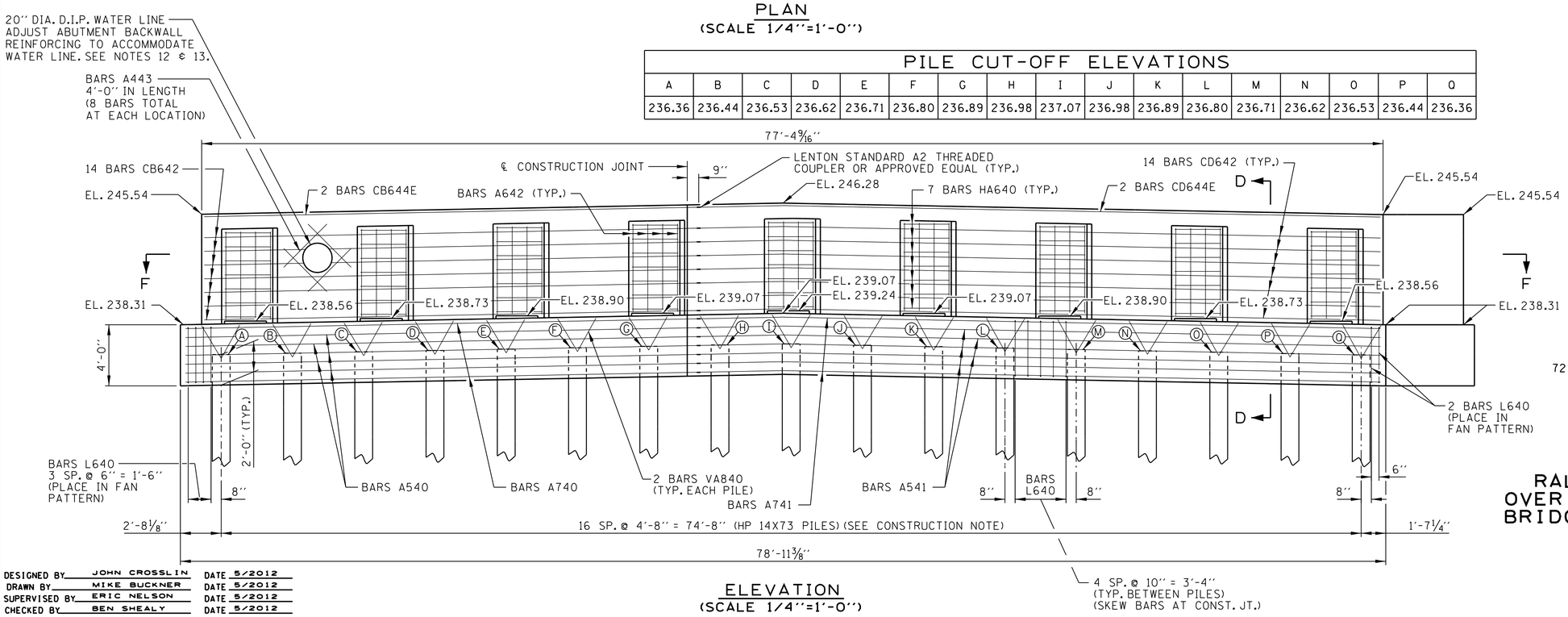

ELEVATION
(SCALE 1/4"=1'-0")

2030 ADT = 18,632
72'-0" ROADWAY WITH MODIFIED STD-1-1SS PARAPET
DESIGN SPEED = 50 MPH

STATE OF TENNESSEE
DEPARTMENT OF TRANSPORTATION

ABUTMENT 2 LAYOUT
RALEIGH-MILLINGTON ROAD
OVER THE LOOSAHATCHIE RIVER
BRIDGE I.D. NO. 79S81030001
STATION 21+76.35
LOG MILE 3.88
SHELBY COUNTY
2013

DESIGNED BY	JOHN CROSSLIN	DATE	5/2012
DRAWN BY	MIKE BUCKNER	DATE	5/2012
SUPERVISED BY	ERIC NELSON	DATE	5/2012
CHECKED BY	BEN SHEALY	DATE	5/2012

2/5/2013 3:52:55 PM
G:\60220947 Raleigh-Millington Bridge\Cad\Abutment2Layout.dgn

TENNESSEE D.O.T.
DESIGN DIVISION
FILE NO.

CONST. NO.

PROJECT NO.	YEAR	SHEET NO.
79054-3407-04	2013	65

REVISIONS

NO.	DATE	BY	BRIEF DESCRIPTION

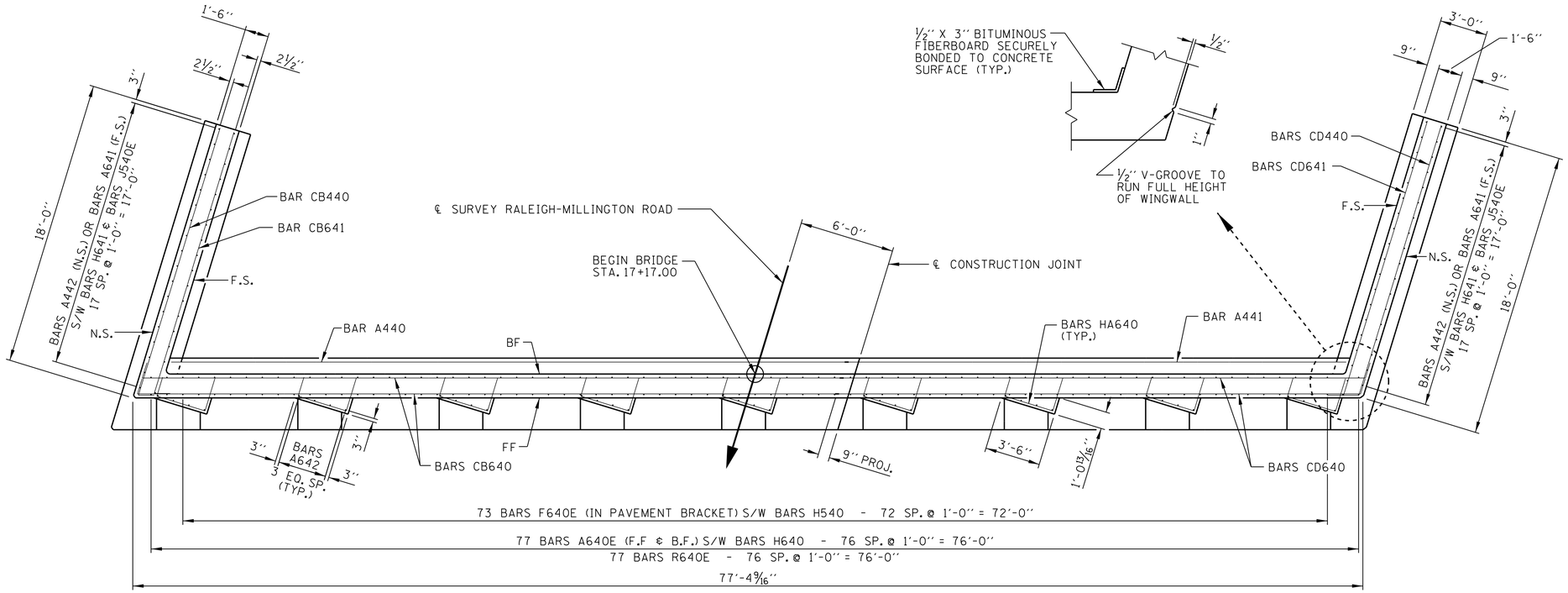

SECTION C-C
(SCALE 1/4"=1'-0")

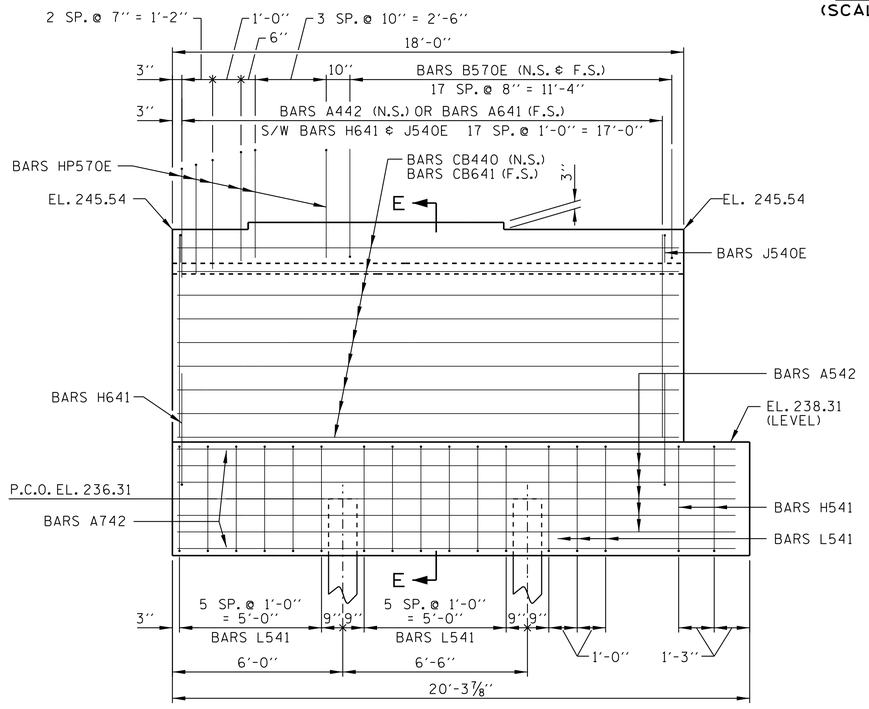

VIEW A-A
(SCALE 3/8"=1'-0")

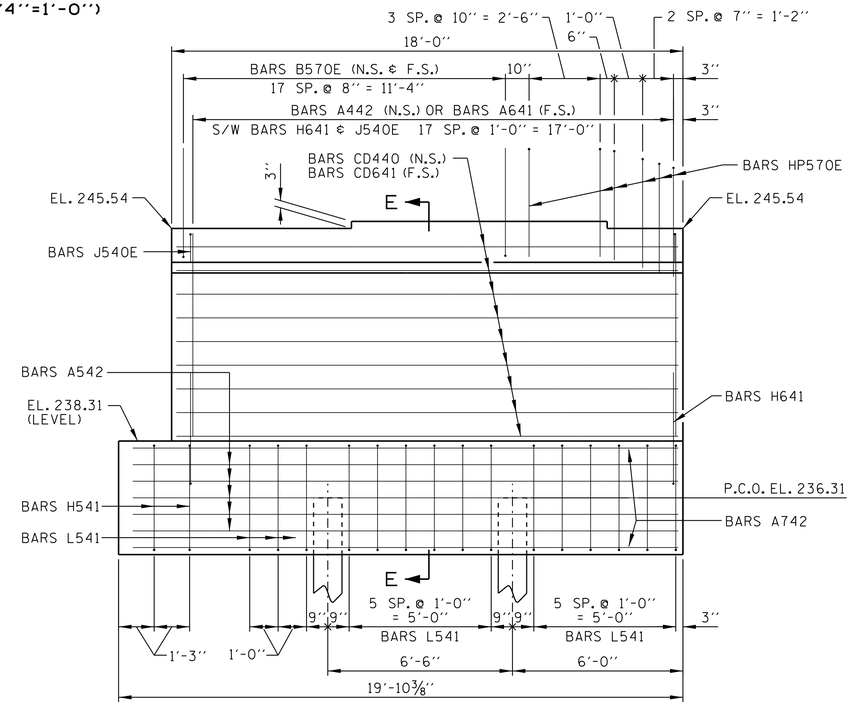

VIEW B-B
(SCALE 3/8"=1'-0")

NOTE:

SEE DWG. U-46-120 FOR SECTION E-E.

DESIGNED BY	JOHN CROSSLIN	DATE	5/2012
DRAWN BY	MIKE BUCKNER	DATE	5/2012
SUPERVISED BY	ERIC NELSON	DATE	5/2012
CHECKED BY	BEN SHEALY	DATE	5/2012

2030 ADT = 18,632
72'-0" ROADWAY WITH MODIFIED STD-1-1SS PARAPET
DESIGN SPEED = 50 MPH

STATE OF TENNESSEE
DEPARTMENT OF TRANSPORTATION

ABUTMENT DETAILS I
RALEIGH-MILLINGTON ROAD
OVER THE LOOSAHATCHIE RIVER
BRIDGE I.D. NO. 79S81030001
STATION 21+76.35
LOG MILE 3.88
SHELBY COUNTY
2013

U-46-118

2/5/2013 3:53:48 PM
G:\60220947 Raleigh-Millington Bridge\Cad\Abutment Details.dgn

TENNESSEE D.O.T.
DESIGN DIVISION
FILE NO.

CONST. NO.		
PROJECT NO.	YEAR	SHEET NO.
79054-3407-04	2013	66

REVISIONS

NO.	DATE	BY	BRIEF DESCRIPTION

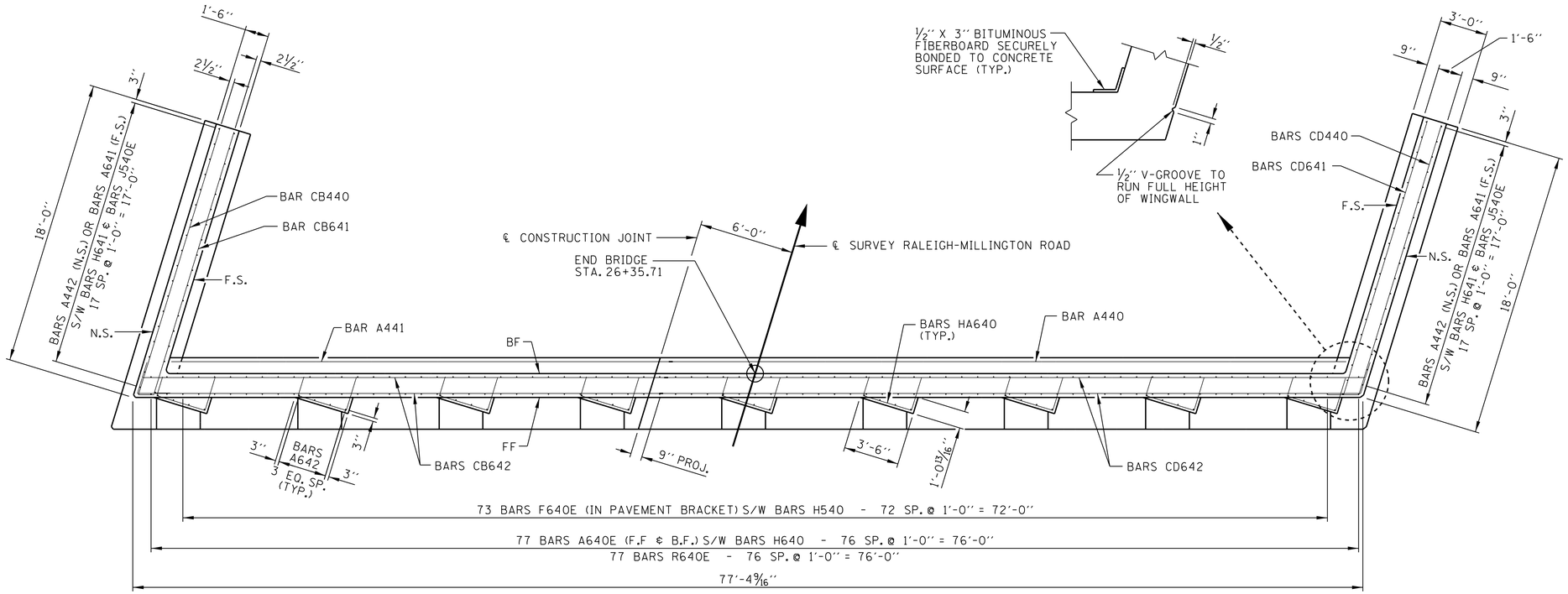

SECTION F-F
(SCALE 1/4"=1'-0")

2030 ADT = 18,632
72'-0" ROADWAY WITH MODIFIED STD-1-1SS PARAPET
DESIGN SPEED = 50 MPH

STATE OF TENNESSEE
DEPARTMENT OF TRANSPORTATION

ABUTMENT DETAILS II
RALEIGH-MILLINGTON ROAD
OVER THE LOOSAHATCHIE RIVER
BRIDGE I.D. NO. 79S81030001
STATION 21+76.35
LOG MILE 3.88
SHELBY COUNTY
2013

DESIGNED BY	JOHN CROSSLIN	DATE	5/2012
DRAWN BY	MIKE BUCKNER	DATE	5/2012
SUPERVISED BY	ERIC NELSON	DATE	5/2012
CHECKED BY	BEN SHEALY	DATE	5/2012

2/5/2013 3:54:45 PM
G:\60220947 Raleigh-Millington Bridge\Cad\Abutment Details_2.dgn

U-46-119

TENNESSEE D.O.T.
DESIGN DIVISION
FILE NO.

CONST. NO.		
PROJECT NO.	YEAR	SHEET NO.
79054-3407-04	2013	67

REVISIONS

NO.	DATE	BY	BRIEF DESCRIPTION

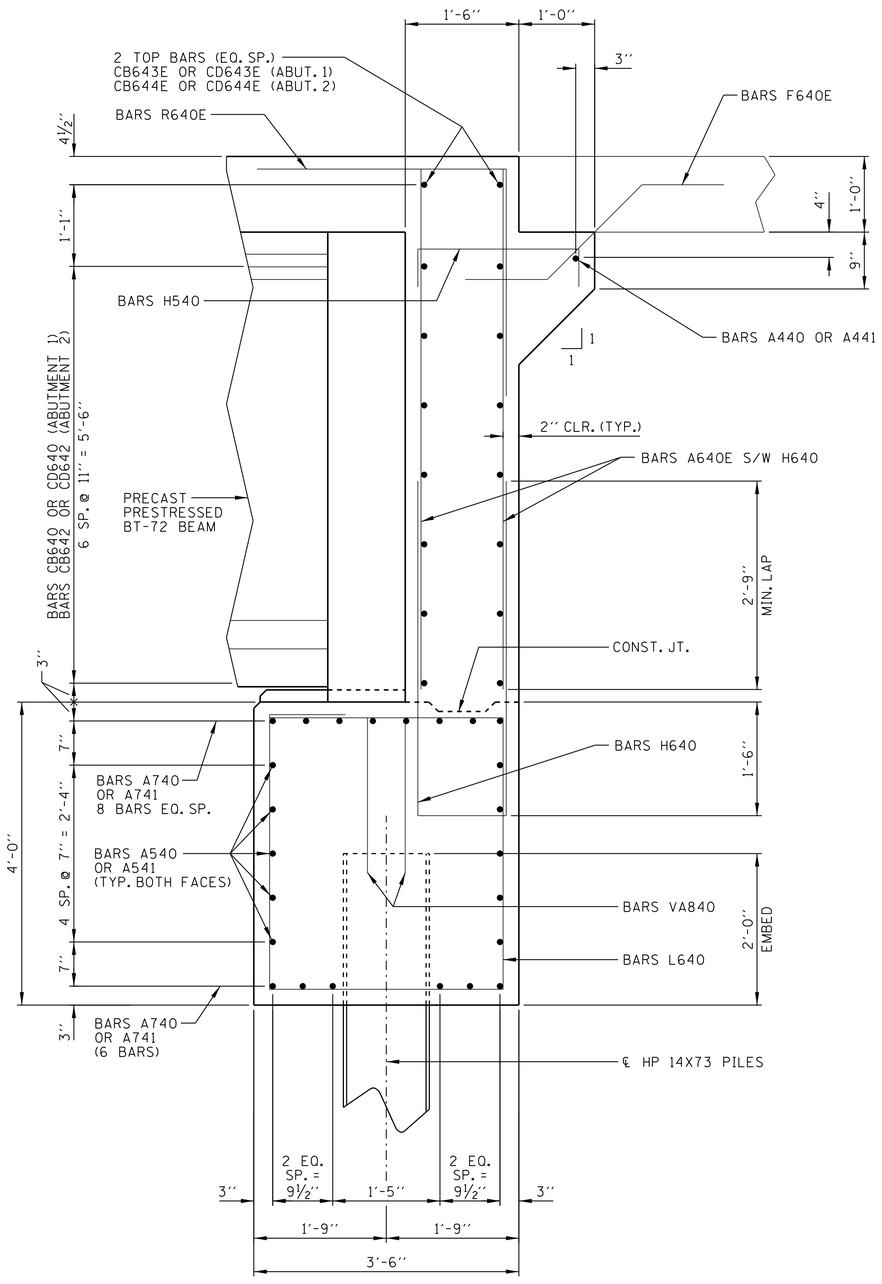

SECTION D-D
(SCALE 1"=1'-0")

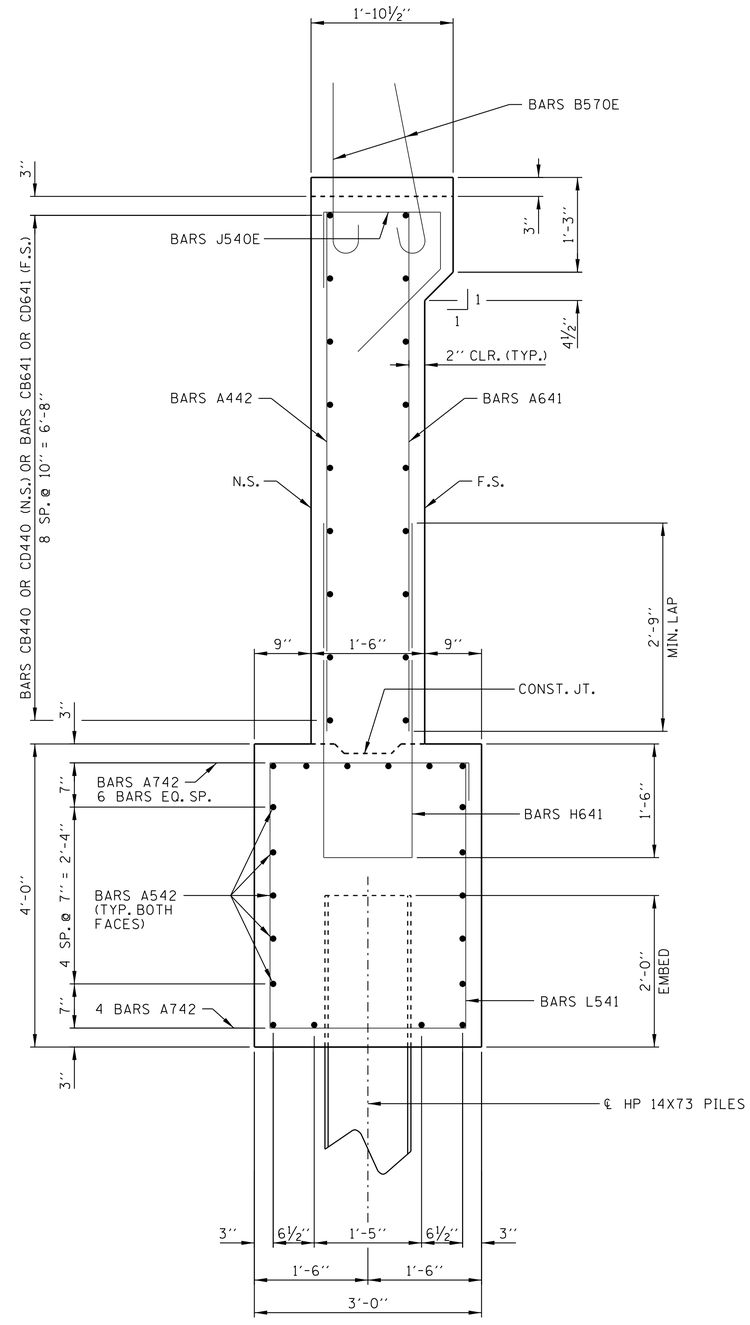

SECTION E-E
(SCALE 1"=1'-0")

2030 ADT = 18,632
72'-0" ROADWAY WITH MODIFIED STD-1-1SS PARAPET
DESIGN SPEED = 50 MPH

STATE OF TENNESSEE
DEPARTMENT OF TRANSPORTATION

ABUTMENT DETAILS III
RALEIGH-MILLINGTON ROAD
OVER THE LOOSAHATCHIE RIVER
BRIDGE I.D. NO. 79S81030001
STATION 21+76.35
LOG MILE 3.88
SHELBY COUNTY
2013

DESIGNED BY	JOHN CROSSLIN	DATE	5/2012
DRAWN BY	MIKE BUCKNER	DATE	5/2012
SUPERVISED BY	ERIC NELSON	DATE	5/2012
CHECKED BY	BEN SHEALY	DATE	5/2012

2/5/2013 3:55:23 PM
G:\60220947 Raleigh-Millington Bridge\Cad\Abutment Details.3.dgn

U-46-120

TENNESSEE D.O.T.
DESIGN DIVISION
FILE NO.

CONST. NO.		
PROJECT NO.	YEAR	SHEET NO.
79054-3407-04	2013	68

REVISIONS

NO.	DATE	BY	BRIEF DESCRIPTION

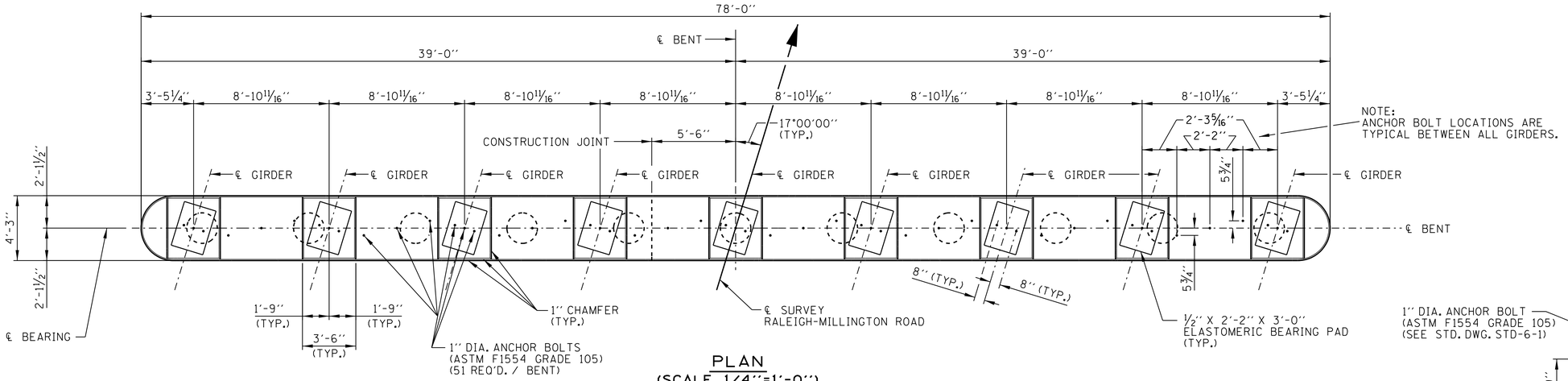

PLAN
(SCALE 1/4"=1'-0")

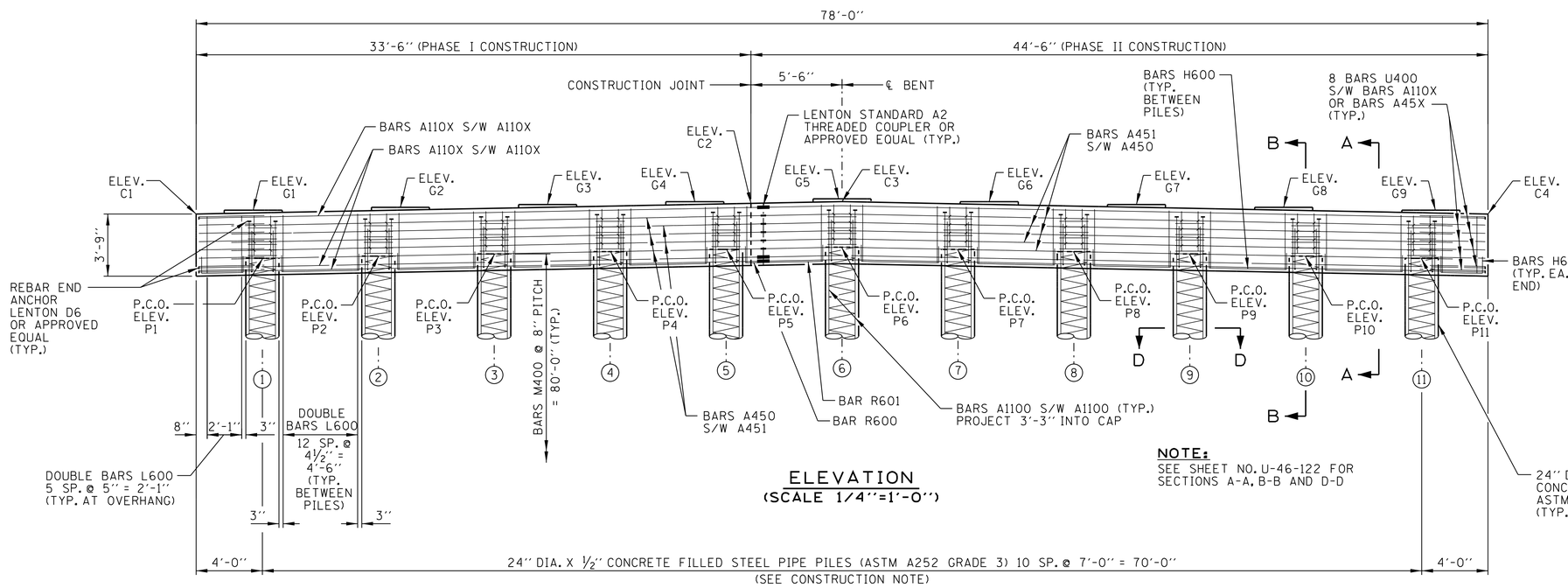

ELEVATION
(SCALE 1/4"=1'-0")

NOTE:
SEE SHEET NO. U-46-122 FOR SECTIONS A-A, B-B AND D-D

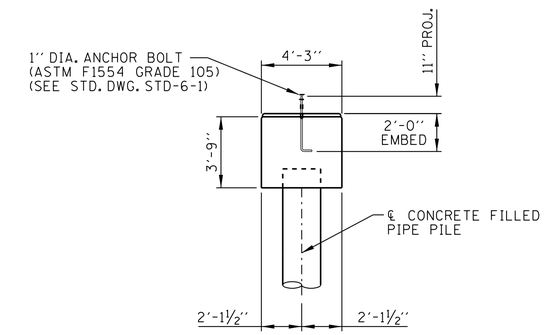

END ELEVATION
(SCALE 1/4"=1'-0")

CONSTRUCTION NOTE:

PRIOR TO THE START OF CONSTRUCTION THE CONTRACTOR SHALL LOCATE ALL EXISTING PILES IN RELATION TO THE PROPOSED PILES. ALSO EXPOSE EXISTING UTILITIES IN THE AREAS WHERE PILES ARE TO BE DRIVEN.

PROPOSED PILES MAY BE SHIFTED UP TO 2'-0" (MAXIMUM CENTER-TO-CENTER SPACING OF ADJACENT PILES SHALL BE 9'-0") TO AVOID THE EXISTING PILES. MINIMUM CLEAR DISTANCE BETWEEN EDGES OF PROPOSED AND EXISTING PILES SHALL BE 3".

IF IT IS NECESSARY TO SHIFT THE PROPOSED PILES MORE THAN 2'-0", CONTACT THE ENGINEER OF RECORD FOR DIRECTION.

NOTES

1. ELASTOMERIC BEARING PADS SHALL BE IN PLACE A MINIMUM OF ONE DAY BEFORE BEING DISTURBED BY SETTING BEAMS ON CONCRETE. PLACE RUBBER BONDING CEMENT IN SUCH A WAY THAT VISIBLE CONCRETE SURFACES WILL NOT BE STAINED.
2. WHEN POURING CAP BEAM PROVISIONS SHALL BE MADE FOR SETTING ANCHOR BOLTS. SEE STD. DWG. STD-6-1. BOLT PROJECTION IS 11".
3. RISER BLOCKS TO BE POURED MONOLITHICALLY WITH CAP BEAM.
4. RISER BLOCK BEARING PAD SURFACE TO CONFORM TO BOTTOM OF BEAM GRADE.
5. SEE STD. DWG. STD-6-1 FOR PILE DETAILS AND NOTES.
6. SEE STD. DWG. STD-5-2 FOR DETAILS OF REQUIRED CONCRETE COLLARS ON PILES AND GENERAL NOTES FOR EXCEPTIONS AT BENTS 1 AND 2.
7. PROJECT BARS A110X & A450 9" INTO PHASE II CONSTRUCTION.
8. PIPE PILES TO BE FILLED WITH 3000 PSI CLASS 'A' CONCRETE TO THE ELEVATION SHOWN IN THE PILE DATA TABLE ON DWG. U-46-101.
9. ALL ANCHOR BOLTS ARE TO BE ASTM F1554 GRADE 105. (TOTAL OF 51 ANCHOR BOLTS PER BENT)
10. BARS A1100 ARE TO HAVE A MINIMUM LAP OF 9'-8".
11. COSTS FOR REBAR END ANCHORS AND COUPLERS SHALL BE CONSIDERED INCIDENTAL TO THE COST OF OTHER ITEMS.

ESTIMATED QUANTITIES	
CLASS 'A' CONCRETE (BRIDGES) (C.Y.)	REINFORCING STEEL (BRIDGES) (LB.)
139	83,579

TABLE OF ELEVATIONS	
LOCATION	ELEVATION
C1	238.32
C2	238.96
C3	239.07
C4	238.32

TABLE OF ELEVATIONS	
LOCATION	ELEVATION
G1	238.56
G2	238.73
G3	238.90
G4	239.07
G5	239.24
G6	239.07
G7	238.90
G8	238.73
G9	238.56

TABLE OF ELEVATIONS	
LOCATION	ELEVATION
P1	235.65
P2	235.78
P3	235.92
P4	236.05
P5	236.19
P6	236.32
P7	236.19
P8	236.05
P9	235.92
P10	235.78
P11	235.65

2030 ADT = 18,632
72'-0" ROADWAY WITH MODIFIED STD-1-1SS PARAPET
DESIGN SPEED = 50 MPH

STATE OF TENNESSEE
DEPARTMENT OF TRANSPORTATION

BENTS 1-6 - LAYOUT
RALEIGH-MILLINGTON ROAD OVER THE LOOSAHATCHIE RIVER
BRIDGE I.D. NO. 79S81030001
STATION 21+76.35
LOG MILE 3.88
SHELBY COUNTY
2013

DESIGNED BY	JOHN CROSSLIN	DATE	5/2012
DRAWN BY	MIKE BUCKNER	DATE	5/2012
SUPERVISED BY	ERIC NELSON	DATE	5/2012
CHECKED BY	BEN SHEALY	DATE	5/2012

2/5/2013 3:57:06 PM
G:\60220947 Raleigh-Millington Bridge\Cad\Bent_Layout.dgn

TENNESSEE D.O.T.
DESIGN DIVISION
FILE NO.

CONST. NO.

PROJECT NO.	YEAR	SHEET NO.
79054-3407-04	2013	69

REVISIONS

NO.	DATE	BY	BRIEF DESCRIPTION

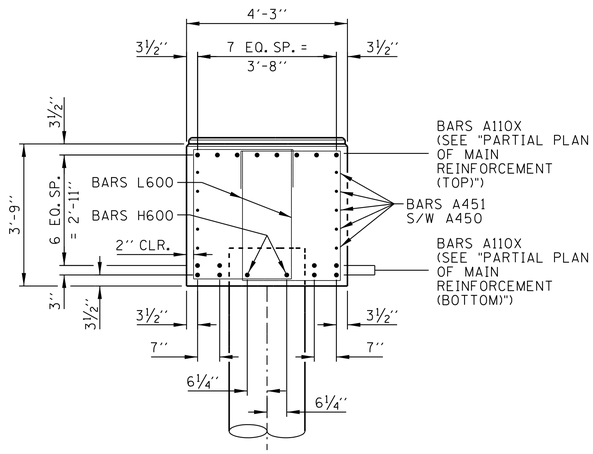

SECTION A-A
(SCALE ½" = 1'-0")

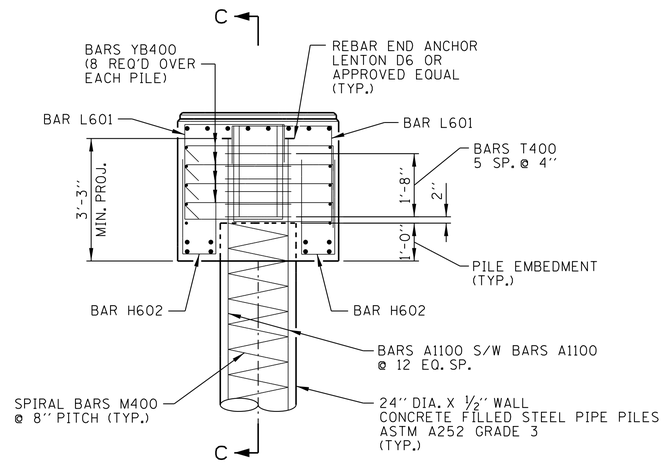

SECTION B-B
(SCALE ½" = 1'-0")

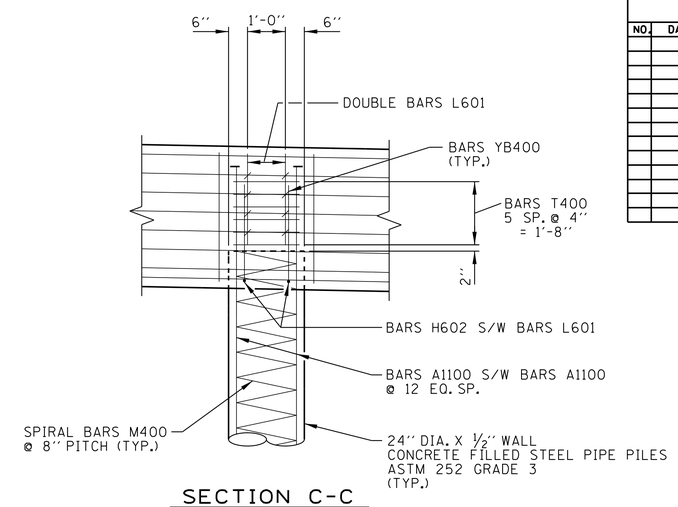

SECTION C-C
(SCALE ½" = 1'-0")

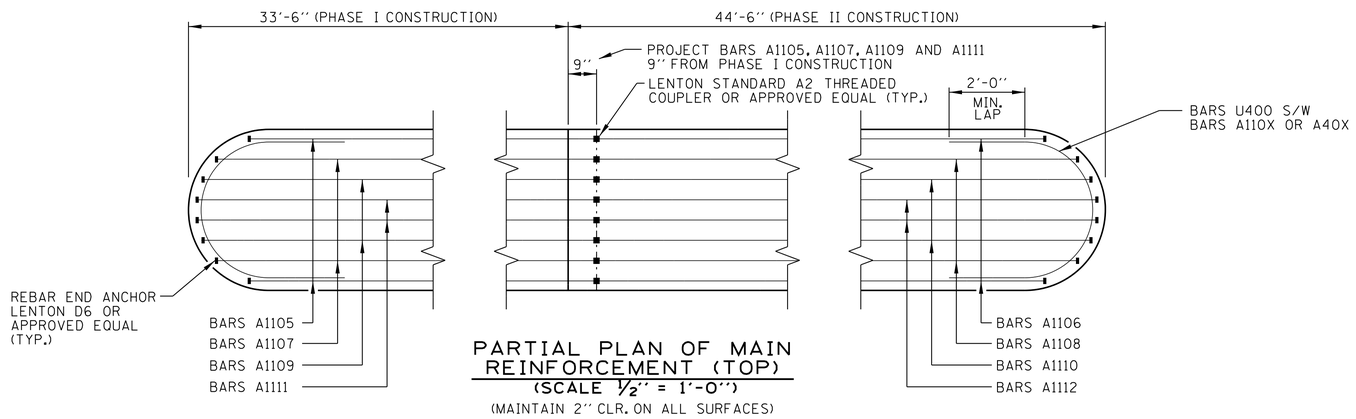

PARTIAL PLAN OF MAIN
REINFORCEMENT (TOP)
(SCALE ½" = 1'-0")
(MAINTAIN 2" CLR. ON ALL SURFACES)

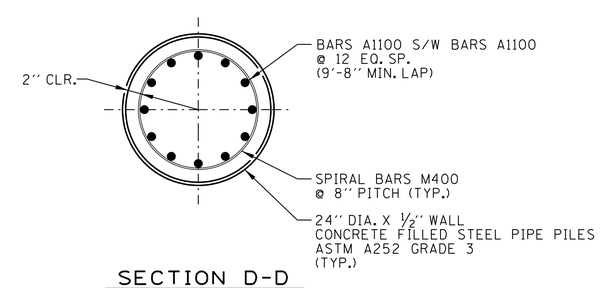

SECTION D-D
(SCALE ½" = 1'-0"

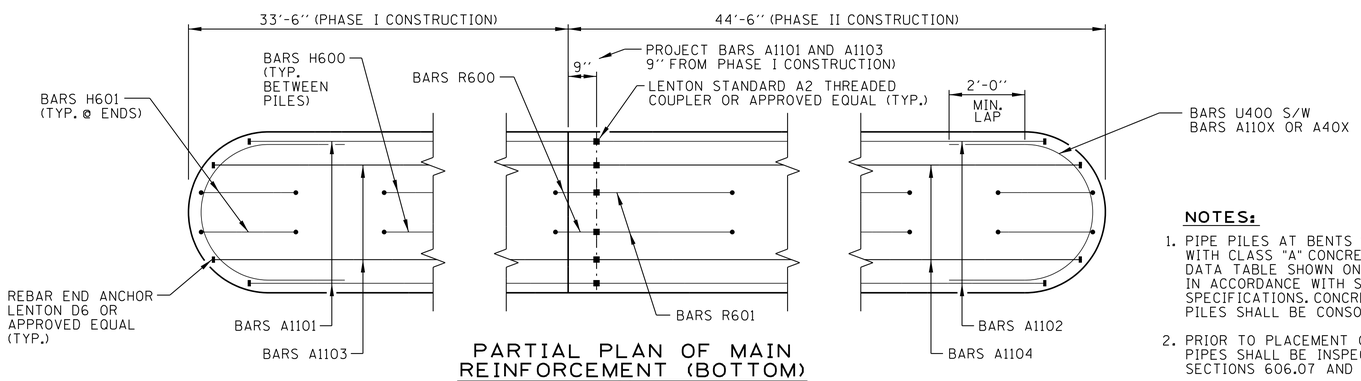

PARTIAL PLAN OF MAIN
REINFORCEMENT (BOTTOM)
(SCALE ½" = 1'-0")
(MAINTAIN 2" CLR. ON ALL SURFACES)
(2 ROWS TOTAL)

NOTES:

1. PIPE PILES AT BENTS SHALL BE DRIVEN OPEN-ENDED AND FILLED WITH CLASS "A" CONCRETE TO THE ELEVATION SHOWN IN THE PILE DATA TABLE SHOWN ON DWG. U-46-101. CONCRETE SHALL BE PLACED IN ACCORDANCE WITH SECTION 606.07 OF THE STANDARD SPECIFICATIONS. CONCRETE IN THE UPPER 25 FEET OF THE PIPE PILES SHALL BE CONSOLIDATED WITH VIBRATORS.
2. PRIOR TO PLACEMENT OF CONCRETE IN THE PIPE PILES, INSIDE OF PIPES SHALL BE INSPECTED AND CLEANED IN ACCORDANCE WITH SECTIONS 606.07 AND 606.15 OF THE STANDARD SPECIFICATIONS.
3. SEE STD. DWG. STD-5-2 FOR DETAILS OF REQUIRED CONCRETE COLLARS ON PILES AND GENERAL NOTES FOR EXCEPTIONS AT BENT 1 AND BENT 2.

2030 ADT = 18,632
72'-0" ROADWAY WITH MODIFIED STD-1-1SS PARAPET
DESIGN SPEED = 50 MPH

STATE OF TENNESSEE
DEPARTMENT OF TRANSPORTATION

BENTS 1-6 - DETAILS
RALEIGH-MILLINGTON ROAD
OVER THE LOOSAHATCHIE RIVER
BRIDGE I.D. NO. 79S81030001
STATION 21+76.35
LOG MILE 3.88
SHELBY COUNTY
2013

DESIGNED BY	JOHN CROSSLIN	DATE	5/2012
DRAWN BY	MIKE BUCKNER	DATE	5/2012
SUPERVISED BY	ERIC NELSON	DATE	5/2012
CHECKED BY	BEN SHEALY	DATE	5/2012

2/5/2013 3:57:44 PM
G:\60220947 Raleigh-Millington Bridge\Cad\Bent_Details.dgn

TENNESSEE D.O.T.
DESIGN DIVISION
FILE NO.

CONST. NO.		
PROJECT NO.	YEAR	SHEET NO.
79054-3407-04	2013	70

REVISIONS

NO.	DATE	BY	BRIEF DESCRIPTION

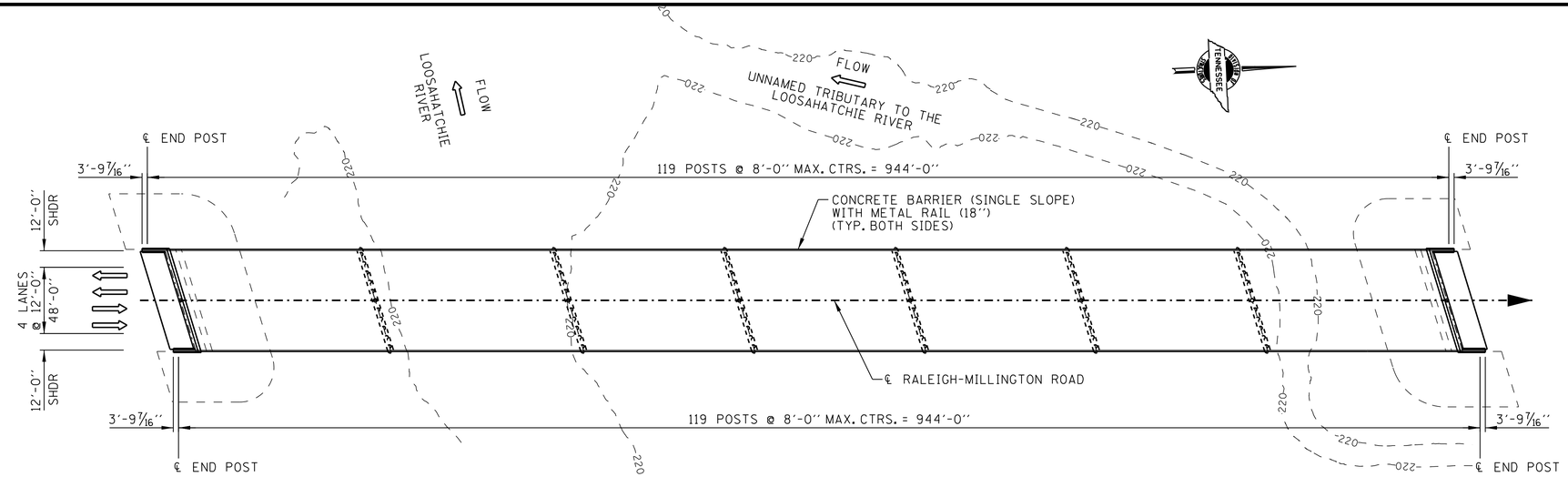

PLAN
(SCALE 1"=50')

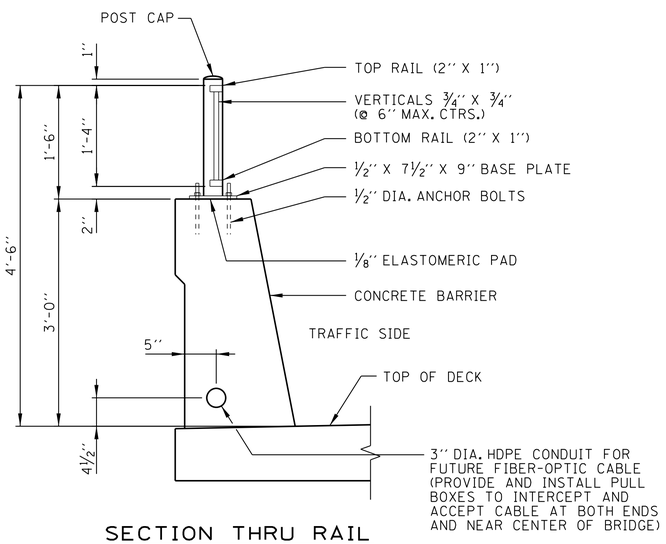

SECTION THRU RAIL
(SCALE 1"=1'-0")

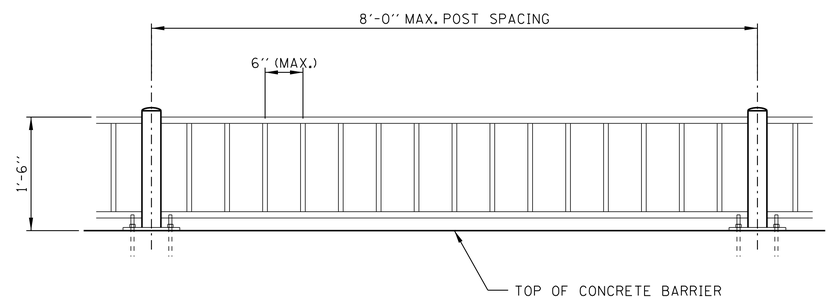

ELEVATION
(SCALE 1"=1'-0")

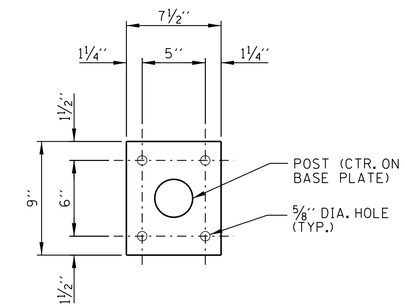

PLAN OF BASE PLATE
(SCALE 2"=1'-0")

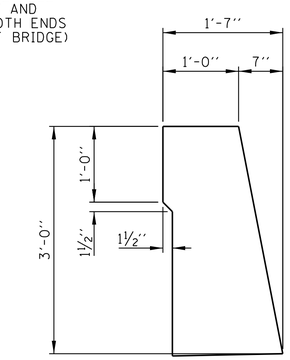

DETAIL "A"
(SCALE 1"=1'-0")

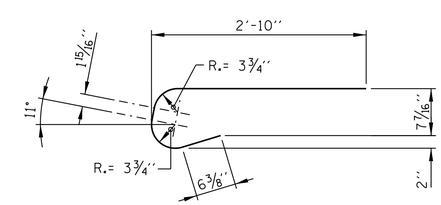

BD500E
SPECIAL DETAIL
(SEE NOTE 8)

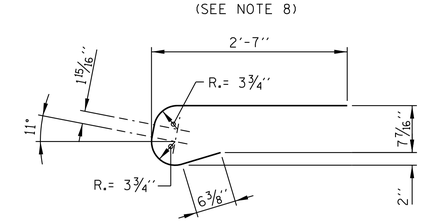

BD501E
SPECIAL DETAIL
(SEE NOTE 8)

NOTES:

1. RAIL MATERIAL SHALL BE BLACK POWDER COATED WROUGHT IRON.
2. RAIL SECTIONS AND POSTS SHALL MEET ALL LOADING REQUIREMENTS OF AASHTO LRFD BRIDGE DESIGN SPECIFICATIONS ARTICLE 13.9.3.
3. CONTRACTOR SHALL SUBMIT DETAILS OF RAIL AND POSTS TO THE ENGINEER FOR APPROVAL.
4. CONTRACTOR MAY PROPOSE ALTERNATE ATTACHMENT DETAILS.
5. THE POST AND ANCHOR PLATE SHALL BE FABRICATED SO THAT THE POST IS VERTICAL TRANSVERSELY AND LONGITUDINALLY.
6. SEE DETAILS THIS SHEET FOR RAIL LIMITS AT BRIDGE ENDS.
7. EXPANSION JOINTS IN RAILS SHALL BE PLACED AT 32'-0" (+/-) CTRS.
8. SINGLE SLOPE CONCRETE PARAPET (STD-1-1SS) IS TO BE MODIFIED TO BE 1'-0" WIDE AT TOP. SEE DETAIL "A". BARS BD500E AND BD501E ARE TO BE FABRICATED FROM SPECIAL DETAIL AS SHOWN ON THIS SHEET AND SUBSTITUTED FOR BARS BD500E AND BD501E SHOWN ON STD. DWG. STD-1-1SS.

2030 ADT = 18,632
72'-0" ROADWAY WITH MODIFIED STD-1-1SS PARAPET
DESIGN SPEED = 50 MPH

STATE OF TENNESSEE
DEPARTMENT OF TRANSPORTATION

WROUGHT IRON RAILING DETAILS
RALEIGH-MILLINGTON ROAD
OVER THE LOOSAHATCHIE RIVER
BRIDGE I.D. NO. 79S81030001
STATION 21+76.35
LOG MILE 3.88
SHELBY COUNTY
2013

DESIGNED BY	JOHN CROSSLIN	DATE	5/2012
DRAWN BY	MIKE BUCKNER	DATE	5/2012
SUPERVISED BY	ERIC NELSON	DATE	5/2012
CHECKED BY	BEN SHEALY	DATE	5/2012

2/6/2013 10:03:39 AM
G:\60220947 Raleigh-Millington Bridge\Cad\Rail.dgn

U-46-123

TENNESSEE D.O.T.
DESIGN DIVISION
FILE NO.

CONST. NO.

PROJECT NO.	YEAR	SHEET NO.
79054-3407-04	2013	71

REVISIONS

NO.	DATE	BY	BRIEF DESCRIPTION

		1	2	3	4	5	6	7	8	9	10	11
ABUTMENT NO. 1	PILE CUT-OFF ELEV.											
	PILE TIP ELEV.											
	IN PLACE PILE LENGTH											

		12	13	14	15	16	17	18	19	20	21
ABUTMENT NO. 1	PILE CUT-OFF ELEV.										
	PILE TIP ELEV.										
	IN PLACE PILE LENGTH										

NOTE 1

LOCATION OF OUT-OF-POSITION TEST PIPE PILE NEAR BENT 1 TO BE SELECTED BY CONTRACTOR, AS APPROVED BY ENGINEER. TEST PILE SHALL BE DRIVEN TO SAME CRITERIA SHOWN FOR BENT 1 IN PILE DATA TABLE ON DRAWING U-46-101. AT COMPLETION OF ALL TESTS, PILE SHALL BE CUT OFF TO AN ELEVATION 2'-0" BELOW NATURAL GROUND.

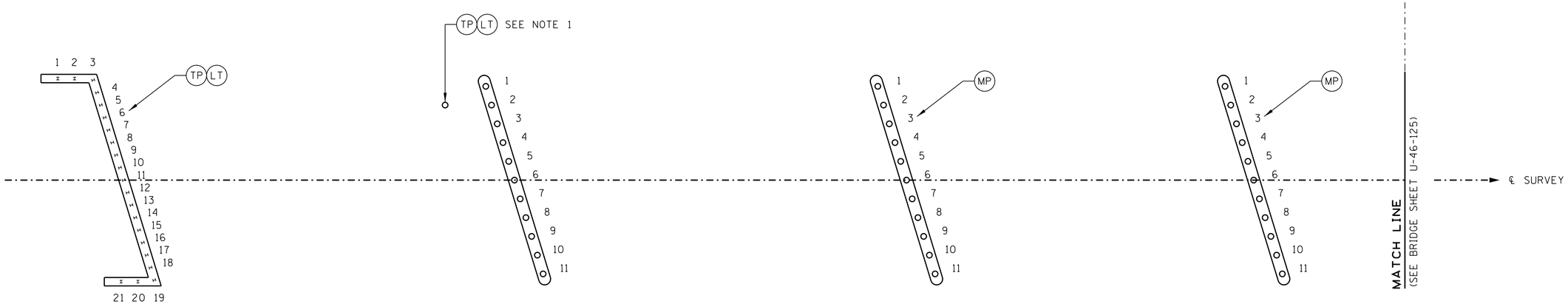

ABUTMENT NO. 1 BENT NO. 1 BENT NO. 2 BENT NO. 3

		1	2	3	4	5	6	7	8	9	10	11
BENT NO. 1	PILE CUT-OFF ELEV.											
	PILE TIP ELEV.											
	IN PLACE PILE LENGTH											
BENT NO. 2	PILE CUT-OFF ELEV.											
	PILE TIP ELEV.											
	IN PLACE PILE LENGTH											
BENT NO. 3	PILE CUT-OFF ELEV.											
	PILE TIP ELEV.											
	IN PLACE PILE LENGTH											

NOTE TO CONTRACTOR AND CONSTRUCTION OFFICE

THE BLANKS ON THIS SHEET ARE TO BE FILLED IN BY THE CONSTRUCTION OFFICE AND/OR FIELD ENGINEER GIVING AS-BUILT CONDITIONS, AFTER COMPLETION. IT IS TO BE SENT TO THE DIVISION OF STRUCTURES TO BECOME PART OF THE FINAL BRIDGE DOCUMENTS.

(TP) TEST PILE

(LT) LOAD TEST

(MP) MONITOR PILE WITH PDA IN ACCORDANCE WITH THE SPECIAL PROVISIONS.

2030 ADT = 18,632
72'-0" ROADWAY WITH MODIFIED STD-1-1SS PARAPET
DESIGN SPEED = 50 MPH

STATE OF TENNESSEE
DEPARTMENT OF TRANSPORTATION

FINAL FOUNDATION DATA I
RALEIGH-MILLINGTON ROAD
OVER THE LOOSAHATCHIE RIVER
BRIDGE I.D. NO. 79S81030001
STATION 21+76.35
LOG MILE 3.88
SHELBY COUNTY
2013

DESIGNED BY JOHN CROSSLIN DATE 5/2012
DRAWN BY MIKE BUCKNER DATE 5/2012
SUPERVISED BY ERIC NELSON DATE 5/2012
CHECKED BY BEN SHEALY DATE 5/2012

2/5/2013 4:32:10 PM
G:\60220947 Raleigh-Millington Bridge\Cad\FinalFoundationData1.dgn

TENNESSEE D.O.T.
DESIGN DIVISION
FILE NO.

CONST. NO.

PROJECT NO.	YEAR	SHEET NO.
79054-3407-04	2013	72

REVISIONS

NO.	DATE	BY	BRIEF DESCRIPTION

		1	2	3	4	5	6	7	8	9	10	11
ABUTMENT NO. 2	PILE CUT-OFF ELEV.											
	PILE TIP ELEV.											
	IN PLACE PILE LENGTH											

		12	13	14	15	16	17	18	19	20	21
ABUTMENT NO. 2	PILE CUT-OFF ELEV.										
	PILE TIP ELEV.										
	IN PLACE PILE LENGTH										

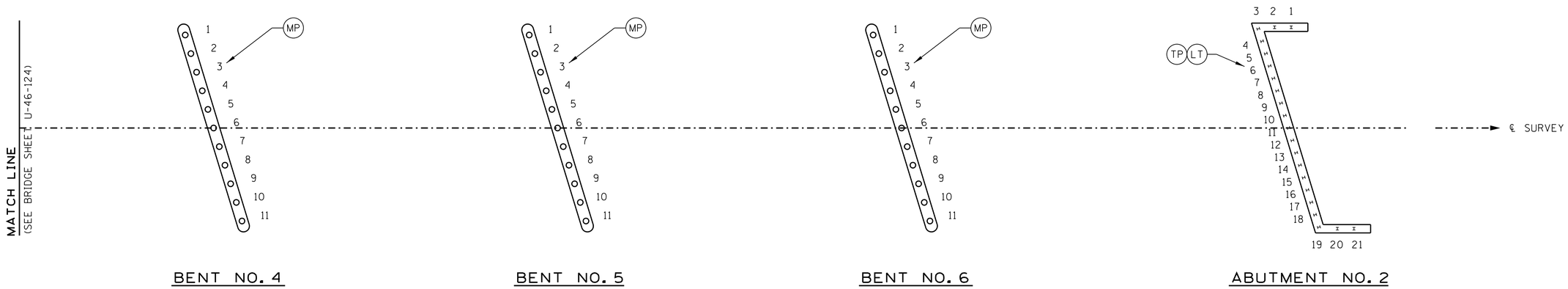

		1	2	3	4	5	6	7	8	9	10	11
BENT NO. 4	PILE CUT-OFF ELEV.											
	PILE TIP ELEV.											
	IN PLACE PILE LENGTH											
BENT NO. 5	PILE CUT-OFF ELEV.											
	PILE TIP ELEV.											
	IN PLACE PILE LENGTH											
BENT NO. 6	PILE CUT-OFF ELEV.											
	PILE TIP ELEV.											
	IN PLACE PILE LENGTH											

(TP) TEST PILE

(LT) LOAD TEST

(MP) MONITOR PILE WITH PDA IN ACCORDANCE WITH THE SPECIAL PROVISIONS.

2030 ADT = 18,632
72'-0" ROADWAY WITH MODIFIED STD-1-1SS PARAPET
DESIGN SPEED = 50 MPH

STATE OF TENNESSEE
DEPARTMENT OF TRANSPORTATION

NOTE TO CONTRACTOR AND CONSTRUCTION OFFICE

THE BLANKS ON THIS SHEET ARE TO BE FILLED IN BY THE CONSTRUCTION OFFICE AND/OR FIELD ENGINEER GIVING AS-BUILT CONDITIONS, AFTER COMPLETION. IT IS TO BE SENT TO THE DIVISION OF STRUCTURES TO BECOME PART OF THE FINAL BRIDGE DOCUMENTS.

FINAL FOUNDATION DATA II
RALEIGH-MILLINGTON ROAD OVER THE LOOSAHATCHIE RIVER
BRIDGE I.D. NO. 79S81030001
STATION 21+76.35
LOG MILE 3.88
SHELBY COUNTY
2013

DESIGNED BY JOHN CROSSLIN DATE 5/2012
DRAWN BY MIKE BUCKNER DATE 5/2012
SUPERVISED BY ERIC NELSON DATE 5/2012
CHECKED BY BEN SHEALY DATE 5/2012

2/5/2013 5:38:44 PM
G:\60220947 Raleigh-Millington Bridge\Cad\FinalFoundationData2.dgn

TENNESSEE D.O.T.
DESIGN DIVISION
FILE NO.

BILL OF STEEL

SUPERSTRUCTURE - EPOXY

BAR	LOCATION	SIZE	NO. REQ'D	BENDING DIMENSIONS A	B	C	D	LENGTH
A500E	SLAB	5	2726	32'-4"				32'-4"
A501E	SLAB	5	2716	43'-11"				43'-11"
A502E	SLAB	5	(A)	(VARIES) 2'-6" TO 30'-10" (INCREMENT @ 2'-2 1/4")				
A503E	SLAB	5	(B)	(VARIES) 4'-8" TO 30'-11" (INCREMENT @ 2'-2 1/4")				
A504E	SLAB	5	(C)	(VARIES) 3'-6" TO 42'-9" (INCREMENT @ 2'-2 1/4")				
A505E	SLAB	5	(D)	(VARIES) 2'-6" TO 41'-9" (INCREMENT @ 2'-2 1/4")				
A506E	SLAB	5	12	6'-0"				6'-0"
A600E	SLAB - OVER BENTS	6	568	40'-0"				40'-0"
A601E	SLAB	6	1216	60'-0"				60'-0"
A602E	SLAB	6	304	58'-1"				58'-1"
A603E	SLAB	6	304	45'-2"				45'-2"
A604E	SLAB	6	1216	37'-2"				37'-2"
A606E	OVERHANG	6	2744	10'-4"				10'-4"
A607E	OVERHANG	6	(E)	(VARIES) 1'-4" TO 10'-0" (INCREMENT @ 2'-2")				
A700E	SLAB - OVER BENTS	7	284	50'-0"				50'-0"
B570E	SLAB/PARAPET	5	5516	3'-0"				3'-7"

SUPERSTRUCTURE - NON-EPOXY

BAR	LOCATION	SIZE	NO. REQ'D	A	B	C	D	LENGTH
A400	DIAPHRAGM	4	24	5'-8"				5'-8"
A401	DIAPHRAGM	4	48	4'-0"				4'-0"
A506	DIAPHRAGM	5	672	5'-8"				5'-8"
CD500	DIAPHRAGM	5	168	3'-4"	2'-2"	1'-11"		5'-6"
F500	DIAPHRAGM	5	588	2'-2"	3'-1 1/4"	2'-2"	1'-7 3/8"	7'-10"
H400	DIAPHRAGM	4	84	1'-2"	1'-0"			3'-2"
L400	DIAPHRAGM	4	288	1'-2"	1'-0"	5'-8"		14'-8"
LS400	DIAPHRAGM	4	108	1'-2"	1'-2"			5'-9"

(A) 2 SETS OF 14 BARS (L= 233'-4" / SET)
(B) 2 SETS OF 13 BARS (L= 231'-4" / SET)
(C) 2 SETS OF 19 BARS (L= 439'-5" / SET)
(D) 2 SETS OF 19 BARS (L= 420'-5" / SET)
(E) 4 SETS OF 5 BARS = 20 BARS (L= 28'-4" / SET)

ABUTMENT NO. 1 - EPOXY

BAR	LOCATION	SIZE	NO. REQ'D	BENDING DIMENSIONS A	B	C	D	LENGTH
A640E	ENDWALL	6	154	6'-10"				6'-10"
B570E	WINGWALL/PARAPET	5	72	3'-0"				3'-7"
CB643E	ENDWALL	6	2	43'-11"	2'-0"	7"		46'-0"
CD643E	ENDWALL	6	2	32'-10"	2'-0"	7"		34'-11"
F640E	ROADWAY BRACKET	6	73	1'-1"	1'-3"	1'-1"	1'-3"	4'-0"
HP570E	WINGWALL/PARAPET	5	16	8"	3'-10"	1'-5"		8'-3"
J540E	WINGWALL	5	36	1'-6 1/2"	1'-0"	9"	1'-1"	4'-10"
R640E	ENDWALL/SLAB	6	77	3'-3"	3'-0"			6'-3"

ABUTMENT NO. 1 - NON-EPOXY

BAR	LOCATION	SIZE	NO. REQ'D	A	B	C	D	LENGTH
A440	ROADWAY BRACKET	4	1	42'-6"				42'-6"
A441	ROADWAY BRACKET	4	1	31'-5"				31'-5"
A442	WINGWALL	4	36	6'-11"				6'-11"
A443	ENDWALL	4	8	4'-0"				4'-0"
A540	ABUTMENT BEAM	5	10	33'-9"				33'-9"
A541	ABUTMENT BEAM	5	10	44'-10"				44'-10"
A542	WING FOOTING	5	20	19'-1"				19'-1"
A641	WINGWALL	6	36	6'-11"				6'-11"
A642	BEAM STOP	6	36	5'-9"				5'-9"
A740	ABUTMENT BEAM	7	14	33'-9"				33'-9"
A741	ABUTMENT BEAM	7	14	44'-10"				44'-10"
A742	WING FOOTING	7	20	19'-1"				19'-1"
CB440	WINGWALL	4	9	17'-5"	2'-0"	7"		19'-5"
CB640	ENDWALL	6	14	43'-11"	2'-0"	7"		45'-11"
CB641	WINGWALL	6	9	17'-2"	2'-0"	7"		19'-2"
CD440	WINGWALL	4	9	17'-8"	2'-0"	7"		19'-8"
CD640	ENDWALL	6	14	32'-10"	2'-0"	7"		34'-10"
CD641	WINGWALL	6	9	17'-11"	2'-0"	7"		19'-11"
H540	ROADWAY BRACKET	5	73	2'-2"	6"			3'-2"
H541	WING FOOTING	5	4	3'-6"	1'-0"			5'-6"
H640	ABUTMENT BEAM/ENDWALL	6	77	1'-2"	4'-4"			9'-10"
H641	WINGWALL/WING FOOTING	6	36	1'-2"	4'-4"			9'-10"
HA640	BEAM STOP	6	63	3'-2"	2'-2"	1'-3"		6'-7"
L640	ABUTMENT BEAM	6	86	3'-2"	1'-0"	3'-8"		14'-8"
L541	WING FOOTING	5	30	2'-8"	1'-0"	3'-8"		13'-8"
VA840	ABUTMENT BEAM	8	34	2'-6"	2'-6"			5'-0"

ABUTMENT NO. 2 - EPOXY

BAR	LOCATION	SIZE	NO. REQ'D	BENDING DIMENSIONS A	B	C	D	LENGTH
A640E	ENDWALL	6	154	6'-10"				6'-10"
B570E	WINGWALL/PARAPET	5	72	3'-0"				3'-7"
CB644E	ENDWALL	6	2	32'-10"	2'-0"	7"		34'-11"
CD644E	ENDWALL	6	2	43'-11"	2'-0"	7"		46'-0"
F640E	ROADWAY BRACKET	6	73	1'-1"	1'-3"	1'-1"	1'-3"	4'-0"
HP570E	WINGWALL/PARAPET	5	16	8"	3'-10"	1'-5"		8'-3"
J540E	WINGWALL	5	36	1'-6 1/2"	1'-0"	9"	1'-1"	4'-10"
R640E	ENDWALL/SLAB	6	77	3'-3"	3'-0"			6'-3"

ABUTMENT NO. 2 - NON-EPOXY

BAR	LOCATION	SIZE	NO. REQ'D	A	B	C	D	LENGTH
A440	ROADWAY BRACKET	4	1	42'-6"				42'-6"
A441	ROADWAY BRACKET	4	1	31'-5"				31'-5"
A442	WINGWALL	4	36	6'-11"				6'-11"
A443	ENDWALL	4	8	4'-0"				4'-0"
A540	ABUTMENT BEAM	5	10	33'-9"				33'-9"
A541	ABUTMENT BEAM	5	10	44'-10"				44'-10"
A542	WING FOOTING	5	20	19'-1"				19'-1"
A641	WINGWALL	6	36	6'-11"				6'-11"
A642	BEAM STOP	6	36	5'-9"				5'-9"
A740	ABUTMENT BEAM	7	14	33'-9"				33'-9"
A741	ABUTMENT BEAM	7	14	44'-10"				44'-10"
A742	WING FOOTING	7	20	19'-1"				19'-1"
CB440	WINGWALL	4	9	17'-5"	2'-0"	7"		19'-5"
CB641	WINGWALL	6	9	17'-2"	2'-0"	7"		19'-2"
CB642	ENDWALL	6	14	32'-10"	2'-0"	7"		34'-10"
CD440	WINGWALL	4	9	17'-8"	2'-0"	7"		19'-8"
CD641	WINGWALL	6	9	17'-11"	2'-0"	7"		19'-11"
CD642	ENDWALL	6	14	43'-11"	2'-0"	7"		45'-11"
H540	ROADWAY BRACKET	5	73	2'-2"	6"			3'-2"
H541	WING FOOTING	5	4	3'-6"	1'-0"			5'-6"
H640	ABUTMENT BEAM/ENDWALL	6	77	1'-2"	4'-4"			9'-10"
H641	WINGWALL/WING FOOTING	6	36	1'-2"	4'-4"			9'-10"
HA640	BEAM STOP	6	63	3'-2"	2'-2"	1'-3"		6'-7"
L640	ABUTMENT BEAM	6	86	3'-2"	1'-0"	3'-8"		14'-8"
L541	WING FOOTING	5	30	2'-8"	1'-0"	3'-8"		13'-8"
VA840	ABUTMENT BEAM	8	34	2'-6"	2'-6"			5'-0"

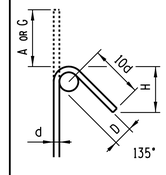

BAR SIZE	D (IN.)	135° HOOK HOOK A OR G	135° HOOK H APPROX.
#3	1 1/2	5	3 1/2
#4	2	6 1/2	4 1/2
#5	2 1/2	8	5 1/2
#6	4 1/2	10 1/4	6 1/2
#7	5 1/4	1-0 1/4	7 1/4
#8	6	1-2 1/4	9

135° SEISMIC STIRRUP/TIE HOOK DIMENSIONS (ALL GRADES)

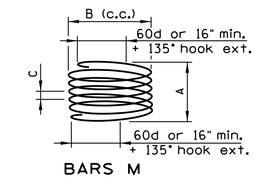

BARS M

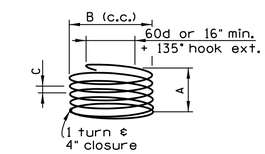

BARS TB

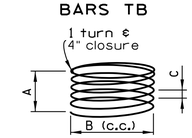

BARS CF

CONST. NO.

PROJECT NO.	YEAR	SHEET NO.
79054-3407-04	2013	73

REVISIONS

NO.	DATE	BY	BRIEF DESCRIPTION

REINFORCING STEEL CODE

TYPE	SIZE	SERIES
A	5	06

NOTE: DIMENSIONS SHOWN ON THIS SHEET ARE OUTSIDE TO OUTSIDE OF BAR. STANDARD C.R.S.I. HOOK DETAILS SHALL APPLY, EXCEPT AS NOTED.

NOTE: THE SUFFIX E FOR BARS SO MARKED DENOTES EPOXY COATED REINFORCEMENT.

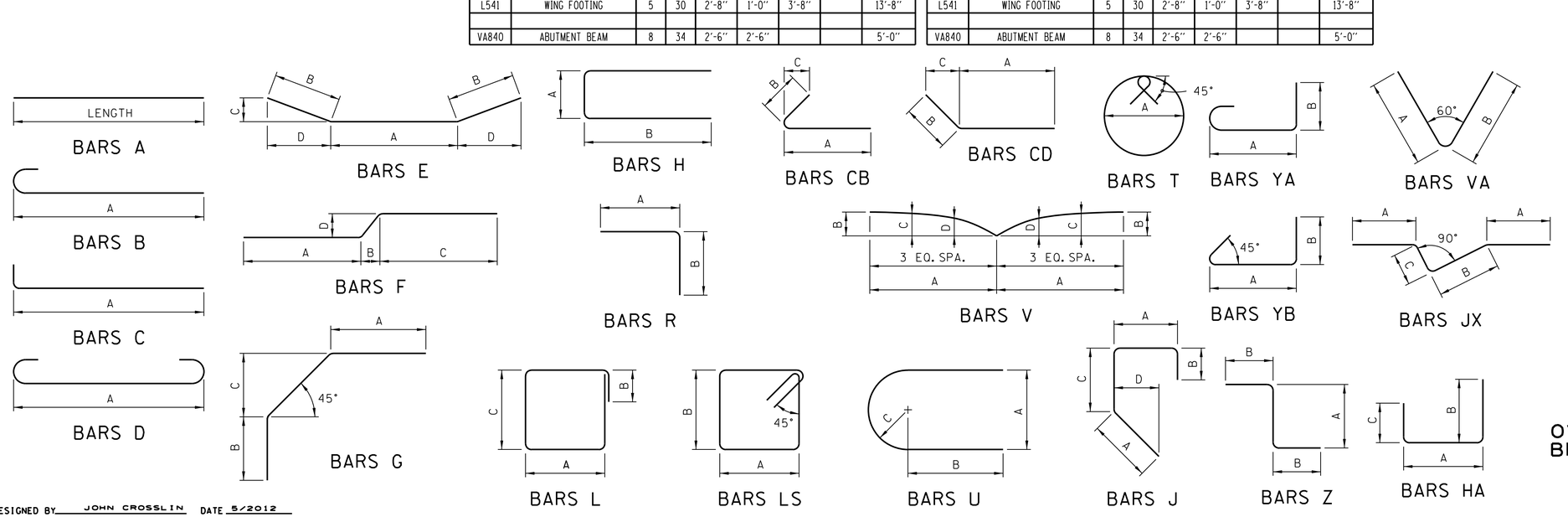

2030 ADT = 18,632
72'-0" ROADWAY WITH MODIFIED STD-1-1SS PARAPET
DESIGN SPEED = 50 MPH

STATE OF TENNESSEE
DEPARTMENT OF TRANSPORTATION

BILL OF STEEL I
RALEIGH-MILLINGTON ROAD
OVER THE LOOSAHATCHIE RIVER
BRIDGE I.D. NO. 79S81030001
STATION 21+76.35
LOG MILE 3.88
SHELBY COUNTY
2013

DESIGNED BY	JOHN CROSSLIN	DATE	5/2012
DRAWN BY	MIKE BUCKNER	DATE	5/2012
SUPERVISED BY	ERIC NELSON	DATE	5/2012
CHECKED BY	BEN SHEALY	DATE	5/2012

2/5/2013 4:31:55 PM
G:\60220947 Raleigh-Millington Bridge\Cad\Bill_Of_Steel.fdgn

U-46-126

TENNESSEE D.O.T.
DESIGN DIVISION
FILE NO.

BILL OF STEEL

BENT NO. 1 - EPOXY

BAR	LOCATION	SIZE	NO. REQ'D	BENDING DIMENSIONS A	B	C	D	LENGTH

BENT NO. 1 - NON-EPOXY

BAR	LOCATION	SIZE	NO. REQ'D	A	B	C	D	LENGTH
A450	CAP	4	10	32'-8"				32'-8"
A451	CAP	4	10	42'-2"				42'-2"
L600	CAP	6	284	2'-7"	1'-0"	3'-5"		13'-0"
U400	CAP	4	16	3'-9"	2'-0"	1'-10½"		9'-11"
A1100	PILES	11	264	46'-0"				46'-0"
A1101	BOTTOM CAP	11	4	32'-8"				32'-8"
A1102	BOTTOM CAP	11	4	42'-2"				42'-2"
A1103	BOTTOM CAP	11	4	33'-6"				33'-6"
A1104	BOTTOM CAP	11	4	43'-1"				43'-1"
A1105	TOP CAP	11	2	32'-8"				32'-8"
A1106	TOP CAP	11	2	42'-2"				42'-2"
A1107	TOP CAP	11	2	33'-6"				33'-6"
A1108	TOP CAP	11	2	43'-1"				43'-1"
A1109	TOP CAP	11	2	33'-11"				33'-11"
A1110	TOP CAP	11	2	43'-5"				43'-5"
A1111	TOP CAP	11	2	34'-1"				34'-1"
A1112	TOP CAP	11	2	43'-7"				43'-7"
H600	BOTTOM CAP	6	18	4'-8"	1'-0"			6'-8"
H601	BOTTOM CAP	6	4	2'-6"	1'-0"			4'-6"
H602	BOTTOM CAP	6	44	10½"	2'-6"			5'-10½"
R600	BOTTOM CAP	6	2	1'-1"	1'-0"			2'-2"
R601	BOTTOM CAP	6	2	3'-7"	1'-0"			4'-8"
L601	OVER PILES	6	44	2'-7"	1'-0"	2'-5"		11'-0"
M400	PILES	4	11	80'-0"	1'-6½"	8"		615'-5"
T400	OVER PILES	4	66	1'-8"				6'-0"
YB400	OVER PILES	4	88	3'-11"	8"			5'-2"

BENT NO. 2 - EPOXY

BAR	LOCATION	SIZE	NO. REQ'D	BENDING DIMENSIONS A	B	C	D	LENGTH

BENT NO. 2 - NON-EPOXY

BAR	LOCATION	SIZE	NO. REQ'D	A	B	C	D	LENGTH
A450	CAP	4	10	32'-8"				32'-8"
A451	CAP	4	10	42'-2"				42'-2"
L600	CAP	6	284	2'-7"	1'-0"	3'-5"		13'-0"
U400	CAP	4	16	3'-9"	2'-0"	1'-10½"		9'-11"
A1100	PILES	11	264	46'-0"				46'-0"
A1101	BOTTOM CAP	11	4	32'-8"				32'-8"
A1102	BOTTOM CAP	11	4	42'-2"				42'-2"
A1103	BOTTOM CAP	11	4	33'-6"				33'-6"
A1104	BOTTOM CAP	11	4	43'-1"				43'-1"
A1105	TOP CAP	11	2	32'-8"				32'-8"
A1106	TOP CAP	11	2	42'-2"				42'-2"
A1107	TOP CAP	11	2	33'-6"				33'-6"
A1108	TOP CAP	11	2	43'-1"				43'-1"
A1109	TOP CAP	11	2	33'-11"				33'-11"
A1110	TOP CAP	11	2	43'-5"				43'-5"
A1111	TOP CAP	11	2	34'-1"				34'-1"
A1112	TOP CAP	11	2	43'-7"				43'-7"
H600	BOTTOM CAP	6	18	4'-8"	1'-0"			6'-8"
H601	BOTTOM CAP	6	4	2'-6"	1'-0"			4'-6"
H602	BOTTOM CAP	6	44	10½"	2'-6"			5'-10½"
R600	BOTTOM CAP	6	2	1'-1"	1'-0"			2'-2"
R601	BOTTOM CAP	6	2	3'-7"	1'-0"			4'-8"
L601	OVER PILES	6	44	2'-7"	1'-0"	2'-5"		11'-0"
M400	PILES	4	11	80'-0"	1'-6½"	8"		615'-5"
T400	OVER PILES	4	66	1'-8"				6'-0"
YB400	OVER PILES	4	88	3'-11"	8"			5'-2"

BENT NO. 3 - EPOXY

BAR	LOCATION	SIZE	NO. REQ'D	BENDING DIMENSIONS A	B	C	D	LENGTH

BENT NO. 3 - NON-EPOXY

BAR	LOCATION	SIZE	NO. REQ'D	A	B	C	D	LENGTH
A450	CAP	4	10	32'-8"				32'-8"
A451	CAP	4	10	42'-2"				42'-2"
L600	CAP	6	284	2'-7"	1'-0"	3'-5"		13'-0"
U400	CAP	4	16	3'-9"	2'-0"	1'-10½"		9'-11"
A1100	PILES	11	264	46'-0"				46'-0"
A1101	BOTTOM CAP	11	4	32'-8"				32'-8"
A1102	BOTTOM CAP	11	4	42'-2"				42'-2"
A1103	BOTTOM CAP	11	4	33'-6"				33'-6"
A1104	BOTTOM CAP	11	4	43'-1"				43'-1"
A1105	TOP CAP	11	2	32'-8"				32'-8"
A1106	TOP CAP	11	2	42'-2"				42'-2"
A1107	TOP CAP	11	2	33'-6"				33'-6"
A1108	TOP CAP	11	2	43'-1"				43'-1"
A1109	TOP CAP	11	2	33'-11"				33'-11"
A1110	TOP CAP	11	2	43'-5"				43'-5"
A1111	TOP CAP	11	2	34'-1"				34'-1"
A1112	TOP CAP	11	2	43'-7"				43'-7"
H600	BOTTOM CAP	6	18	4'-8"	1'-0"			6'-8"
H601	BOTTOM CAP	6	4	2'-6"	1'-0"			4'-6"
H602	BOTTOM CAP	6	44	10½"	2'-6"			5'-10½"
R600	BOTTOM CAP	6	2	1'-1"	1'-0"			2'-2"
R601	BOTTOM CAP	6	2	3'-7"	1'-0"			4'-8"
L601	OVER PILES	6	44	2'-7"	1'-0"	2'-5"		11'-0"
M400	PILES	4	11	80'-0"	1'-6½"	8"		615'-5"
T400	OVER PILES	4	66	1'-8"				6'-0"
YB400	OVER PILES	4	88	3'-11"	8"			5'-2"

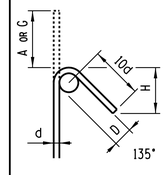

BAR SIZE	D (IN.)	135° HOOK HOOK A OR G	H APPROX.
#3	1½	5	3½
#4	2	6½	4½
#5	2½	8	5½
#6	4½	10¼	6½
#7	5¼	1-0¼	7¼
#8	6	1-2¼	9

135° SEISMIC STIRRUP/TIE HOOK DIMENSIONS (ALL GRADES)

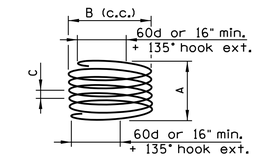

BARS M

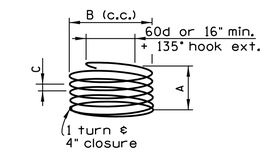

BARS TB

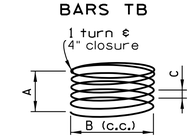

BARS CF

CONST. NO.

PROJECT NO.	YEAR	SHEET NO.
79054-3407-04	2013	74

REVISIONS

NO.	DATE	BY	BRIEF DESCRIPTION

REINFORCING STEEL CODE

TYPE	SIZE	SERIES
A	5	06

NOTE: DIMENSIONS SHOWN ON THIS SHEET ARE OUTSIDE TO OUTSIDE OF BAR. STANDARD C.R.S.I. HOOK DETAILS SHALL APPLY, EXCEPT AS NOTED.

NOTE: THE SUFFIX E FOR BARS SO MARKED DENOTES EPOXY COATED REINFORCEMENT.

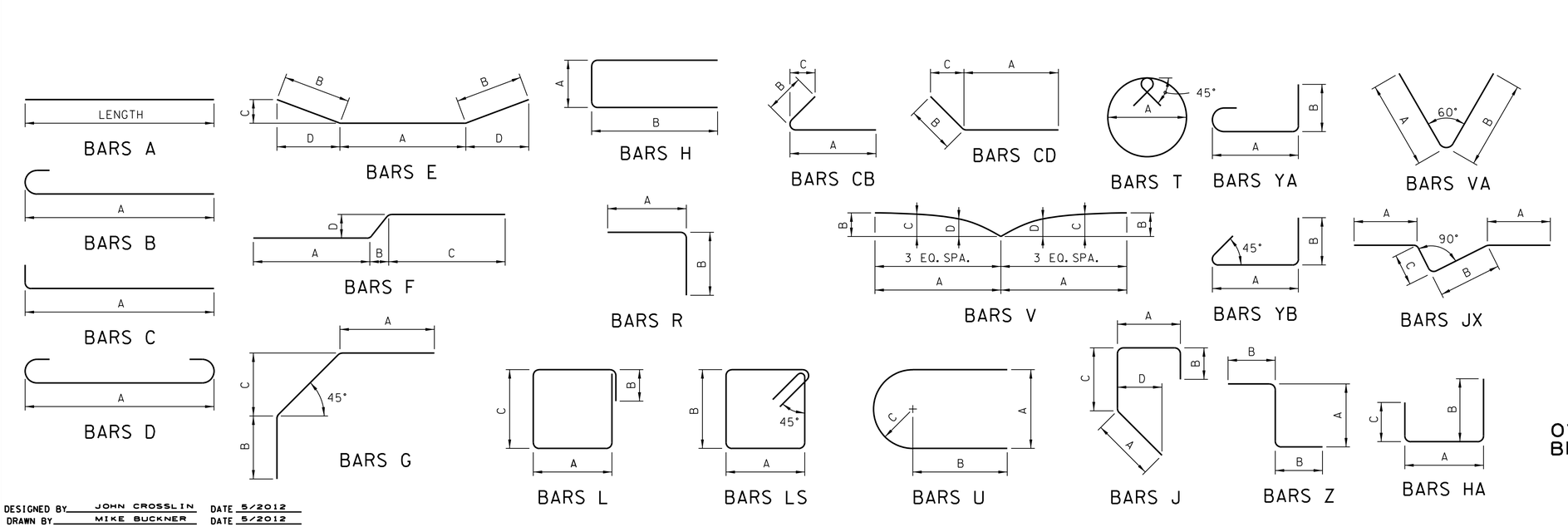

2030 ADT = 18,632
72'-0" ROADWAY WITH MODIFIED STD-1-1SS PARAPET
DESIGN SPEED = 50 MPH

STATE OF TENNESSEE
DEPARTMENT OF TRANSPORTATION

BILL OF STEEL II
RALEIGH-MILLINGTON ROAD OVER THE LOOSAHATCHIE RIVER
BRIDGE I.D. NO. 79S81030001
STATION 21+76.35
LOG MILE 3.88
SHELBY COUNTY
2013

DESIGNED BY	JOHN CROSSLIN	DATE	5/2012
DRAWN BY	MIKE BUCKNER	DATE	5/2012
SUPERVISED BY	ERIC NELSON	DATE	5/2012
CHECKED BY	BEN SHEALY	DATE	5/2012

2/5/2013 4:30:42 PM
G:\6022094 7 Raleigh-Millington Bridge\Cad\Bill_Of_Steel_2.dgn

U-46-127

TENNESSEE D.O.T.
DESIGN DIVISION
FILE NO.

BILL OF STEEL

BENT NO. 4 - EPOXY

BAR	LOCATION	SIZE	NO. REQ'D	BENDING DIMENSIONS A	B	C	D	LENGTH

BENT NO. 4 - NON-EPOXY

BAR	LOCATION	SIZE	NO. REQ'D	A	B	C	D	LENGTH
A450	CAP	4	10	32'-8"				32'-8"
A451	CAP	4	10	42'-2"				42'-2"
L600	CAP	6	284	2'-7"	1'-0"	3'-5"		13'-0"
U400	CAP	4	16	3'-9"	2'-0"	1'-10½"		9'-11"
A1100	PILES	11	264	46'-0"				46'-0"
A1101	BOTTOM CAP	11	4	32'-8"				32'-8"
A1102	BOTTOM CAP	11	4	42'-2"				42'-2"
A1103	BOTTOM CAP	11	4	33'-6"				33'-6"
A1104	BOTTOM CAP	11	4	43'-1"				43'-1"
A1105	TOP CAP	11	2	32'-8"				32'-8"
A1106	TOP CAP	11	2	42'-2"				42'-2"
A1107	TOP CAP	11	2	33'-6"				33'-6"
A1108	TOP CAP	11	2	43'-1"				43'-1"
A1109	TOP CAP	11	2	33'-11"				33'-11"
A1110	TOP CAP	11	2	43'-5"				43'-5"
A1111	TOP CAP	11	2	34'-1"				34'-1"
A1112	TOP CAP	11	2	43'-7"				43'-7"
H600	BOTTOM CAP	6	18	4'-8"	1'-0"			6'-8"
H601	BOTTOM CAP	6	4	2'-6"	1'-0"			4'-6"
H602	BOTTOM CAP	6	44	10½"	2'-6"			5'-10½"
R600	BOTTOM CAP	6	2	1'-1"	1'-0"			2'-2"
R601	BOTTOM CAP	6	2	3'-7"	1'-0"			4'-8"
L601	OVER PILES	6	44	2'-7"	1'-0"	2'-5"		11'-0"
M400	PILES	4	11	80'-0"	1'-6½"	8"		615'-5"
T400	OVER PILES	4	66	1'-8"				6'-0"
YB400	OVER PILES	4	88	3'-11"	8"			5'-2"

BENT NO. 5 - EPOXY

BAR	LOCATION	SIZE	NO. REQ'D	BENDING DIMENSIONS A	B	C	D	LENGTH

BENT NO. 5 - NON-EPOXY

BAR	LOCATION	SIZE	NO. REQ'D	A	B	C	D	LENGTH
A450	CAP	4	10	32'-8"				32'-8"
A451	CAP	4	10	42'-2"				42'-2"
L600	CAP	6	284	2'-7"	1'-0"	3'-5"		13'-0"
U400	CAP	4	16	3'-9"	2'-0"	1'-10½"		9'-11"
A1100	PILES	11	264	46'-0"				46'-0"
A1101	BOTTOM CAP	11	4	32'-8"				32'-8"
A1102	BOTTOM CAP	11	4	42'-2"				42'-2"
A1103	BOTTOM CAP	11	4	33'-6"				33'-6"
A1104	BOTTOM CAP	11	4	43'-1"				43'-1"
A1105	TOP CAP	11	2	32'-8"				32'-8"
A1106	TOP CAP	11	2	42'-2"				42'-2"
A1107	TOP CAP	11	2	33'-6"				33'-6"
A1108	TOP CAP	11	2	43'-1"				43'-1"
A1109	TOP CAP	11	2	33'-11"				33'-11"
A1110	TOP CAP	11	2	43'-5"				43'-5"
A1111	TOP CAP	11	2	34'-1"				34'-1"
A1112	TOP CAP	11	2	43'-7"				43'-7"
H600	BOTTOM CAP	6	18	4'-8"	1'-0"			6'-8"
H601	BOTTOM CAP	6	4	2'-6"	1'-0"			4'-6"
H602	BOTTOM CAP	6	44	10½"	2'-6"			5'-10½"
R600	BOTTOM CAP	6	2	1'-1"	1'-0"			2'-2"
R601	BOTTOM CAP	6	2	3'-7"	1'-0"			4'-8"
L601	OVER PILES	6	44	2'-7"	1'-0"	2'-5"		11'-0"
M400	PILES	4	11	80'-0"	1'-6½"	8"		615'-5"
T400	OVER PILES	4	66	1'-8"				6'-0"
YB400	OVER PILES	4	88	3'-11"	8"			5'-2"

BENT NO. 6 - EPOXY

BAR	LOCATION	SIZE	NO. REQ'D	BENDING DIMENSIONS A	B	C	D	LENGTH

BENT NO. 6 - NON-EPOXY

BAR	LOCATION	SIZE	NO. REQ'D	A	B	C	D	LENGTH
A450	CAP	4	10	32'-8"				32'-8"
A451	CAP	4	10	42'-2"				42'-2"
L600	CAP	6	284	2'-7"	1'-0"	3'-5"		13'-0"
U400	CAP	4	16	3'-9"	2'-0"	1'-10½"		9'-11"
A1100	PILES	11	264	46'-0"				46'-0"
A1101	BOTTOM CAP	11	4	32'-8"				32'-8"
A1102	BOTTOM CAP	11	4	42'-2"				42'-2"
A1103	BOTTOM CAP	11	4	33'-6"				33'-6"
A1104	BOTTOM CAP	11	4	43'-1"				43'-1"
A1105	TOP CAP	11	2	32'-8"				32'-8"
A1106	TOP CAP	11	2	42'-2"				42'-2"
A1107	TOP CAP	11	2	33'-6"				33'-6"
A1108	TOP CAP	11	2	43'-1"				43'-1"
A1109	TOP CAP	11	2	33'-11"				33'-11"
A1110	TOP CAP	11	2	43'-5"				43'-5"
A1111	TOP CAP	11	2	34'-1"				34'-1"
A1112	TOP CAP	11	2	43'-7"				43'-7"
H600	BOTTOM CAP	6	18	4'-8"	1'-0"			6'-8"
H601	BOTTOM CAP	6	4	2'-6"	1'-0"			4'-6"
H602	BOTTOM CAP	6	44	10½"	2'-6"			5'-10½"
R600	BOTTOM CAP	6	2	1'-1"	1'-0"			2'-2"
R601	BOTTOM CAP	6	2	3'-7"	1'-0"			4'-8"
L601	OVER PILES	6	44	2'-7"	1'-0"	2'-5"		11'-0"
M400	PILES	4	11	80'-0"	1'-6½"	8"		615'-5"
T400	OVER PILES	4	66	1'-8"				6'-0"
YB400	OVER PILES	4	88	3'-11"	8"			5'-2"

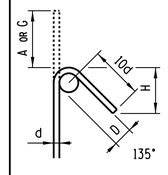

BAR SIZE	D (IN.)	135° HOOK HOOK A OR G	H APPROX.
#3	1½	5	3½
#4	2	6½	4½
#5	2½	8	5½
#6	4½	10¼	6½
#7	5¼	1-0¼	7¼
#8	6	1-2¼	9

135° SEISMIC STIRRUP/TIE HOOK DIMENSIONS (ALL GRADES)

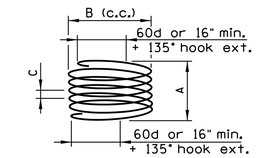

BARS M

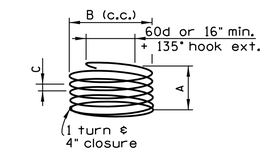

BARS TB

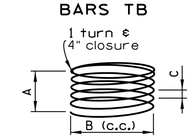

BARS CF

CONST. NO.

PROJECT NO.	YEAR	SHEET NO.
79054-3407-04	2013	75

REVISIONS

NO.	DATE	BY	BRIEF DESCRIPTION

REINFORCING STEEL CODE

TYPE	SIZE	SERIES
A	5	06

NOTE: DIMENSIONS SHOWN ON THIS SHEET ARE OUTSIDE TO OUTSIDE OF BAR. STANDARD C.R.S.I. HOOK DETAILS SHALL APPLY, EXCEPT AS NOTED.

NOTE: THE SUFFIX E FOR BARS SO MARKED DENOTES EPOXY COATED REINFORCEMENT.

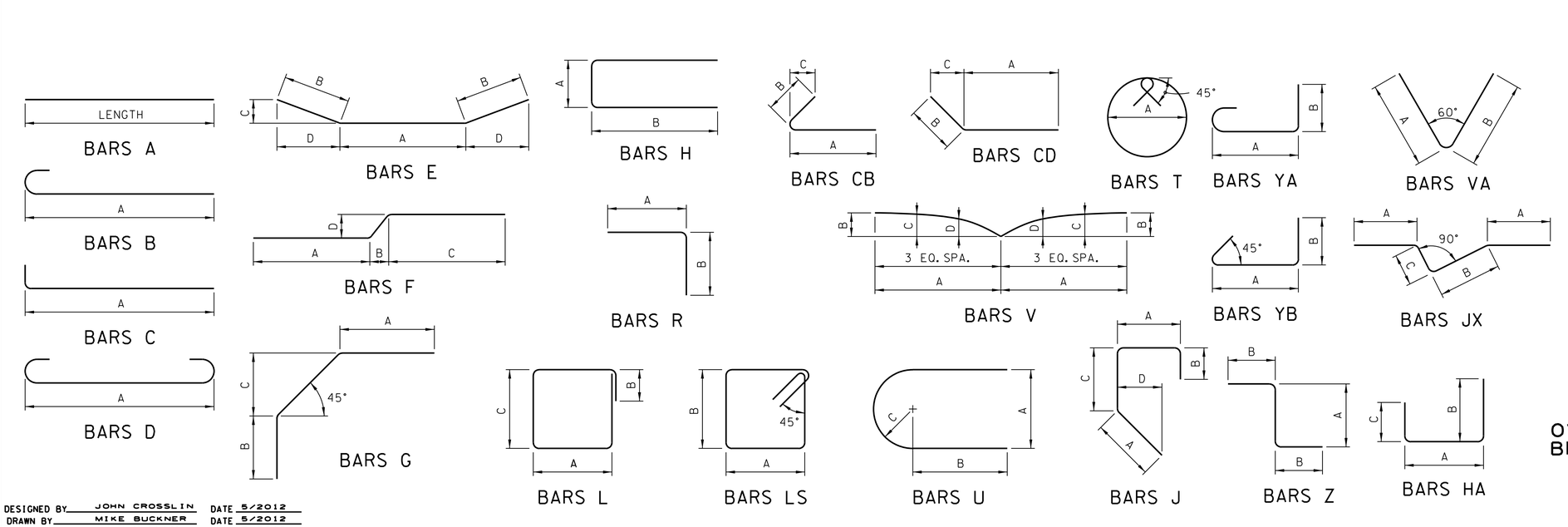

2030 ADT = 18,632
72'-0" ROADWAY WITH MODIFIED STD-1-1SS PARAPET
DESIGN SPEED = 50 MPH

STATE OF TENNESSEE
DEPARTMENT OF TRANSPORTATION

BILL OF STEEL III
RALEIGH-MILLINGTON ROAD
OVER THE LOOSAHATCHIE RIVER
BRIDGE I.D. NO. 79S81030001
STATION 21+76.35
LOG MILE 3.88
SHELBY COUNTY
2013

DESIGNED BY	JOHN CROSSLIN	DATE	5/2012
DRAWN BY	MIKE BUCKNER	DATE	5/2012
SUPERVISED BY	ERIC NELSON	DATE	5/2012
CHECKED BY	BEN SHEALY	DATE	5/2012

2/5/2013 4:31:14 PM
G:\6022094 7 Raleigh-Millington Bridge\Cad\Bill_Of_Steel_3.dgn

U-46-128