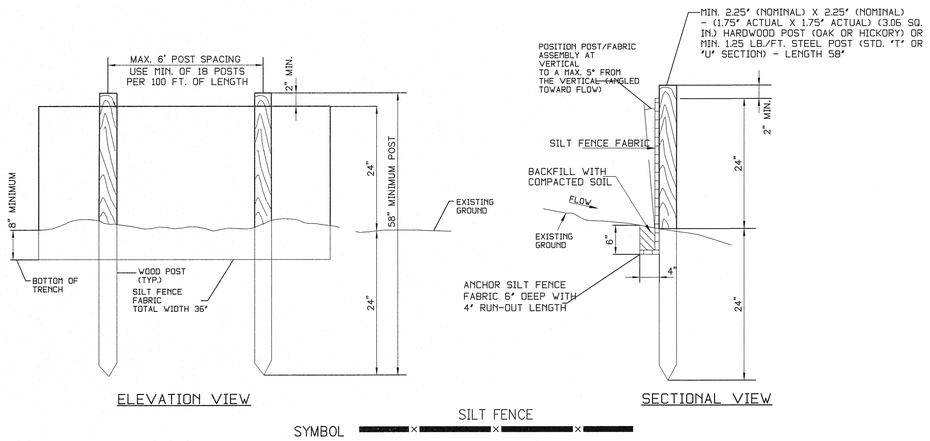

11	SILT FENCE
	NO SCALE

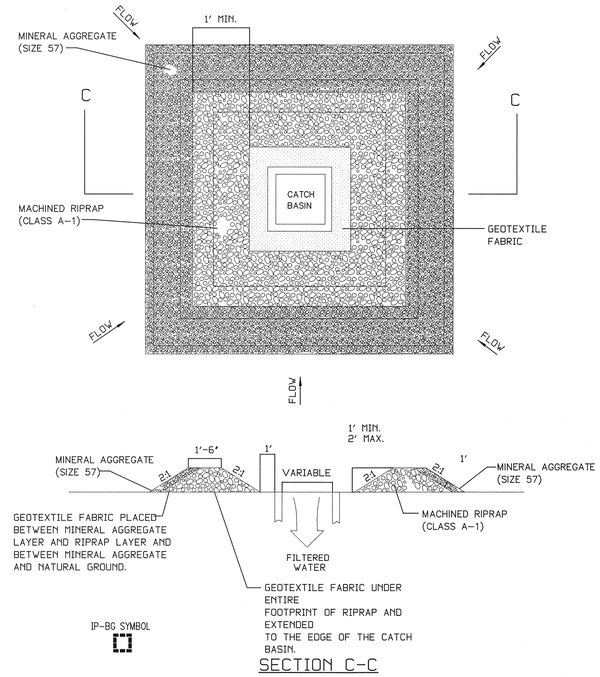

12	CATCH BASIN PROTECTION
	NO SCALE

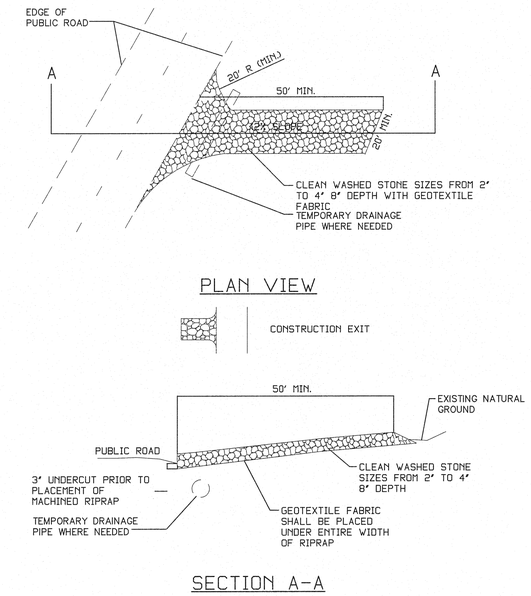

13	STABILIZED CONSTRUCTION ENTRANCE/EXIT
	NO SCALE

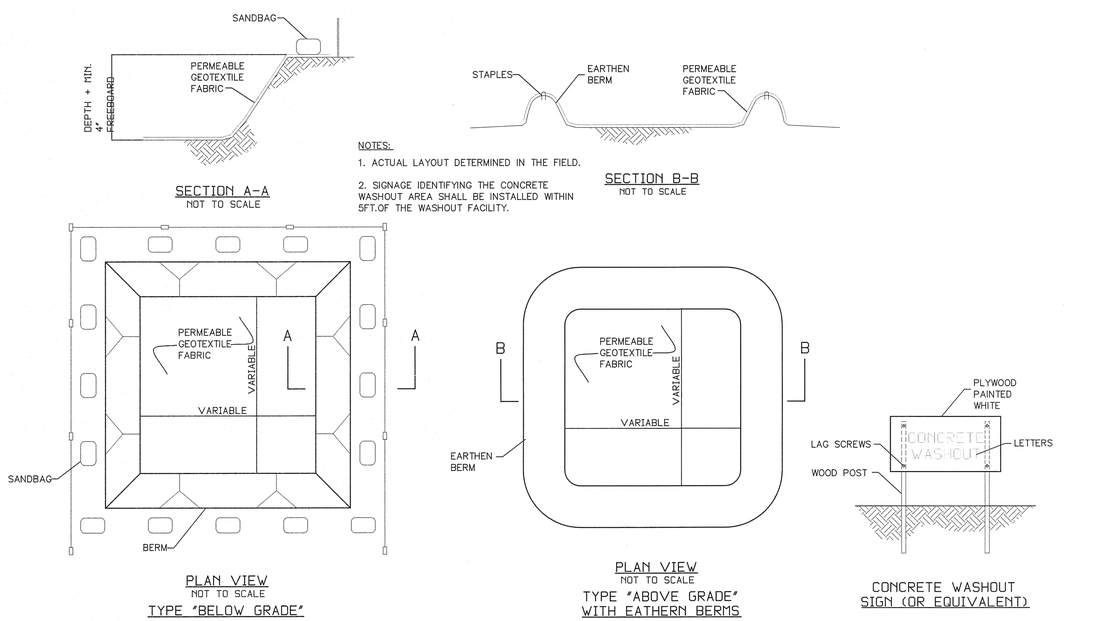

NOTES:

1. ACTUAL LAYOUT DETERMINED IN THE FIELD.
2. SIGNAGE IDENTIFYING THE CONCRETE WASHOUT AREA SHALL BE INSTALLED WITHIN 5FT.OF THE WASHOUT FACILITY.

14	CONCRETE WASHOUT AREA
	NO SCALE

SR CONSULTING, LLC
ENGINEERING – PLANNING
LANDSCAPE ARCHITECTURE
5909 Shelby Oaks Drive
Suite 200
Memphis TN 38134
901-373-0380
(fax) 373-0370
info@SRCE-memphis.com

REVISIONS

CIP PROJECT No. 100102

ITEM No.	DESCRIPTION OF CHANGE	APPROVAL DATE

RICHARD L. HELTON REGISTERED ENGINEER No. 011094 STATE OF TENNESSEE 3-14-13

SHEET 1 of 1

SHEET 11 of 11

DIVISION OF PUBLIC WORKS

EROSION CONTROL DETAILS

SHELBY COUNTY, TN

SURVEY	Milestone Land Surveying, Inc.	DATE	4/03	BOOK	
DRAFTED	SR Consulting, LLC	DATE	3/13	SCALE	none
DESIGN	SR Consulting, LLC	DATE	3/13	CHECKED	DATE

Rev S:\2012\2012-028 Stage 4 - Peggy Edmondson\11-details.dwg Mar 13, 2013 - 11:27am