EXISTING AIR HANDLING UNIT MODIFICATION SCHEDULE

MARK	AREA SERVED	SUPPLY AIR CFM	TOTAL S.P., IN. WG	EXTERNAL S.P., IN. WG	OUTSIDE AIR CFM (MIN)	SUPPLY AIR FAN MOTOR			COILS: ELECTRIC PREHEAT COIL				PREHEAT COIL			COILS: COOLING COIL												ULTRAVIOLET LIGHT SECTION					FILTERS				FAN VIBRATION ISOLATION *			MOTOR CONTROLLER	REMARKS	FANS EQUAL TO	
						HP	PH	VOLTS	KW	PH	VOLTS	NO. OF STAGES	E.A.T. °F DB	L.A.T. °F DB	COIL HEATING CAPACITY, MBH	E.A.T. °F DB/WB	L.A.T. °F DB/WB	SENSIBLE CAPACITY MBH	TOTAL CAPACITY MBH	MAXIMUM GPM AT 43°F E.W.T./ 59°F LWT	MAXIMUM WATER P.D. (FEET)	MAX. AIR P.D., IN. W.G.	MAXIMUM FACE VELOCITY (F.P.M.)	ESTIMATED COIL DIMENSIONS (FIELD VERIFY)	PH	VOLTS	MCA	MOCP	NO. OF LAMPS/ WATTAGE OF LAMPS	TYPE	FILTER BANK SIZE	MAXIMUM FACE VELOCITY (F.P.M.)	FILTER EFFICIENCY	BASE TYPE	ISOLATION TYPE	MINIMUM DEFLECTION (INCHES)			MFR.	MODEL
AHU-5B	JAIL AREA 1ST THRU 5TH FLOORS	50400	6.10"	–	16800	75	3	460	105	3	460	5	65.3	75	503	50.3	–	–	2 @ 126"x 36"	82.3/68.6	51.1/ 50.6	1700	2800	339.2	10	0.8	550	3 @ 170" WIDE x 29" TALL	3	460	?	?	44 @ 36W PHILLIPS TUVPL-L	2" PLEATED	14'x10'	360	MERV 9	A	3	1.0	VARIABLE FREQUENCY DRIVE WITH INTEGRAL DISCONNECT SWITCH AND BYPASS	①②③④⑤⑥⑦⑧⑨⑪⑫	LOREN COOK	540PLCD11
AHU-7B	JAIL AREA 1ST THRU 4TH FLOORS	34400	5.50"	–	3600	(2)@ 25 EA.	3	460	105	3	460	5	N/A	N/A	N/A	N/A	N/A	N/A	N/A	78.3/65.2	51.1/ 50.6	1010	1481	180	10	0.8	550	2 @ 130" WIDE x 38" TALL	3	460	?	?	48 @ 36W PHILLIPS TUVPL-L	2" PLEATED	12'x6'	360	MERV 9	A	3	1.5	VARIABLE FREQUENCY DRIVE WITH INTEGRAL DISCONNECT SWITCH AND BYPASS	①②③⑤⑥⑦⑧⑩⑪	LOREN COOK	270QMX-HP (2) FANS

* VIBRATION ISOLATION TYPES AND DESIGNATIONS ARE PER 2007 ASHRAE HANDBOOK-HVAC APPLICATIONS, CHAPTER 47, TABLE 48.

AIR HANDLING UNIT SCHEDULE REMARKS

① THE EXISTING BUILT-UP HORIZONTAL AHU CASING SHALL REMAIN IN PLACE WITH MODIFICATIONS AS DESCRIBED IN THIS PROJECT.

② REPLACE EXISTING SUPPLY FAN FOR AHU-5B WITH A CENTRIFUGAL PLENUM FAN ON VIBRATION ISOLATED FRAME. REPLACE THE TWO EXISTING DUCT-MOUNTED SUPPLY FANS FOR AHU-7B WITH MIXED FLOW INLINE FANS WITH VIBRATION ISOLATORS. FAN MOTORS SHALL BE TEFC-PREMIUM EFFICIENCY INVERTER RATED MOTORS.

③ THE EXISTING ELECTRIC PREHEAT COIL SHALL SHALL BE REFURBISHED, CLEANED, AND PUT BACK INTO SERVICE.

④ REPLACE EXISTING HOT WATER HEATING COIL. MAXIMUM COIL WATER PRESSURE DROP SHALL BE 5.0 FEET HEAD WITH AN EWT OF 105°F AND LWT OF 75°F, AT 50.3 GPM, MAXIMUM COIL AIR PRESSURE DROP SHALL NOT EXCEED 0.3 INCHES W.C.

⑤ REPLACE EXISTING COOLING COIL AND DRAIN PANS. THE NEW COOLING COIL DRAIN PANS SHALL BE SLOPED STAINLESS STEEL TYPE WITH INTERMEDIATE DRAIN PANS AT EACH LEVEL WITH DRAIN OPENINGS AT SAME LOCATIONS AS EXISTING FOR CONNECTION TO EXISTING CONDENSATE DRAINAGE SYSTEM. COOLING COILS SHALL BE A MINIMUM OF (8) ROWS DEEP. COOLING COIL DRAIN PANS SHALL EXTEND A MINIMUM OF 12" BEYOND COOLING COIL ON BOTH INLET AND DISCHARGE FACE. COOLING COIL DRAIN PANS SHALL BE A MINIMUM OF 3" DEEP. CONDENSATE DRAIN PIPING BETWEEN UPPER DRAIN PANS AND THE LOWER DRAIN PAN SHALL BE MINIMUM 2" COPPER PIPE. VERIFY COIL SIZES WITH FIELD CONDITIONS.

⑥ REMOVE EXISTING FILTERS FROM FILTER HOLDING FRAME AND REPLACE WITH 2" MERV 8 PLEATED FILTERS. VERIFY FILTER RACK SIZE AND FILTER QUANTITY WITH FIELD CONDITIONS.

⑦ REPLACE EXISTING UV LAMPS IN EXISTING LUMALIER ULTRA VIOLET FIXTURE BANK.

⑧ CONTRACTOR SHALL INCLUDE THE DISASSEMBLY/REASSEMBLY OF THE FANS, EXISTING AHU CASING, COILS, FILTER FRAME, UV LIGHTING SECTION, ETC. AS REQUIRED FOR COMPONENT EGRESS INTO THE BUILDING AND EGRESS INTO THE AHU CASING.

⑨ PROVIDE FAN WITH SAFETY ENCLOSURE, INLET PIEZOMETRIC RING, RESTRAINED SPRING ISOLATORS FOR FLOOR MOUNTING, STEEL FLANGED INLET, AND INLET SAFETY SCREEN. FAN IS APPROX. 3000 LBS.

⑩ PROVIDE FANS WITH VENTED BELT GUARD, INLET PIEZOMETRIC RING, HINGED ACCESS DOOR, SHAFT GROUNDING RING, AND SPRING ISOLATERS FOR CEILING MOUNTING. FAN IS APPROX. 1300 LBS.

⑪ BID ALTERNATE NO. 1: REPLACE EXISTING ELECTRIC PRE-HEAT COIL WITH COIL HAVING SAME CAPACITY AND ELECTRICAL REQUIREMENTS AS THE EXISTING COIL.

⑫ BID ALTERNATE NO. 3: IN LIEU REPLACING THE EXISTING AHU-5B SUPPLY FAN WITH A SINGLE SUPPLY FAN, PROVIDE A TURNKEY FAN WALL SYSTEM FOR SUPPLY AIR. FAN WALL SYSTEM SHALL INCLUDE, BUT NOT BE LIMITED TO THE FOLLOWING:

1. AN ARRAY OF SIX (6) 15 HP/460V/3PH (13.39 BHP) DIRECT DRIVE PLENUM FANS EQUAL TO TWIN CITY FAN & BLOWER MODEL MPQS WITH TEFC PREMIUM EFFICIENCY INVERTER RATED NON-OVERLOADING MOTORS AND VIBRATION WITHIN THE LIMITS OF ANSI/ AMCA 204 FAN APPLICATION CATEGORY BV-4 BV-5 AND SHALL NOT REQUIRE SPRING ISOLATORS TO MEET THE BV-4 BV-5 RATING. FAN WALL TOTAL STATIC PRESSURE SHALL INCLUDE THE FAN WALL CABINET EFFECT PRESSURE DROP IN ADDITION TO THE SCHEDULED TOTAL STATIC PRESSURE.
2. FAN INLET SCREENS
3. A SINGLE VARIABLE SPEED DRIVE WITH DISCONNECT SWITCH, RFI/EMI EMC FILTER, DC LINE CHOKE OR 5% INPUT LINE REACTOR, AND BACNET CONNECTION FOR FUTURE BMS FOR CONTROL OF ALL FANS.
4. ALL POWER WIRING, CONTROL WIRING, AND ASSOCIATED CONDUIT BETWEEN THE FANS, THE MMP PANEL, AND THE VFD FOR FAN OPERATION. SINGLE POINT POWER CONNECTION TO SYSTEM.
5. CUSTOM FAN/PLENUM ENCLOSURE INSIDE THE AHU WITH DOOR SIMILAR TO THAT SHOWN FOR THE SUPPLY FAN IN THE BASE BID.
6. BLANK-OFF PANEL FOR MANUAL ISOLATION OF INDIVIDUAL FANS FOR SERVICING.
7. PIEZOMETER RING AIRFLOW STATION IN EACH FAN INLET WITH MANIFOLDED TUBING SO THAT THE MEASUREMENT IS REPRESENTATIVE OF ALL OF THE FANS IN THE ARRAY. THE DEVICE SHALL HAVE A MEASUREMENT ACCURACY OF PLUS OR MINUS 5%.
8. BACKDRAFT DAMPERS FOR AUTOMATIC ISOLATION OF EACH FAN.
9. FAN ARRAY MOTOR CONTROL USING A COMMON VFD. ALL FAN MOTORS SHALL BE WIRED TO INDIVIDUAL MANUAL MOTOR PROTECTION (MMP) AND INDIVIDUAL DISCONNECT SWITCHES. MMP'S SHALL BE CONTAINED IN A SINGLE MMP CONTROL PANEL AND SHALL BE LOCATED ON THE EXTERIOR OF THE AHU AT A LOCATION AS DETERMINED BY THE CONTRACTOR. THE MMP CONTROL PANEL SHALL HAVE SINGLE POINT OF CONNECTION FOR INPUT POWER WIRING FROM THE VFD AND SHALL FEED POWER TO INDIVIDUAL MMP'S THRU A COMMON BUSBAR.
10. FAN WALL SYSTEM SHALL BE DISASSEMBLED AND REASSEMBLED AT JOB SITE AS REQUIRED FOR ENTRY INTO THE BUILDING AND INSTALLATION IN THE EXISTING BUILT-UP AHU CASING.
11. COORDINATE WITH ELECTRICAL CONTRACTOR FOR PROVISION OF THE FEEDER TO THE FAN WALL'S VFD IN LIEU OF THE VFD SHOWN ON THE ELECTRICAL PLANS USING THE SAME 175 AMP BREAKER.
12. PROVIDE FACTORY STARTUP OF THE FAN ARRAY AND ITS CONTROLS.

RETURN FAN SCHEDULE

MARK	AHU SERVED	RETURN AIR CFM	TOTAL S.P., IN. WG	EXTERNAL S.P., IN. WG	RETURN AIR FAN MOTOR			FAN VIBRATION ISOLATION *			MOTOR CONTROLLER	REMARKS	EQUAL TO	
					HP	PH	VOLTS	BASE TYPE	ISOLATION TYPE	MINIMUM DEFLECTION (INCHES)			MFR.	MODEL
CFRAF-2	AHU-5B	33600	N/A	1.55	20	3	460	A	3	1"	VARIABLE FREQUENCY DRIVE WITH INTEGRAL DISCONNECT SWITCH AND BYPASS	①②③	LOREN COOK	330QMX
CFRAF-4	AHU-7B	30800	N/A	1.31	15	3	460	A	3	1"	VARIABLE FREQUENCY DRIVE WITH INTEGRAL DISCONNECT SWITCH AND BYPASS	①②③	LOREN COOK	330QMX

* VIBRATION ISOLATION TYPES AND DESIGNATIONS ARE PER 2007 ASHRAE HANDBOOK-HVAC APPLICATIONS, CHAPTER 47, TABLE 48.

RETURN FAN SCHEDULE REMARKS

① THE EXISTING SUSPENDED RETURN FAN SHALL BE REPLACED WITH THE SCHEDULED FAN. REPLACE EXISTING RETURN FAN WITH A MIXED FLOW PRESSURE CLASS 1 FAN ON ISOLATED FRAME WITH TEFC-PREMIUM EFFICIENCY INVERTER RATED MOTOR.

② CONTRACTOR SHALL INCLUDE THE DISASSEMBLY/REASSEMBLY OF THE FANS AS REQUIRED FOR COMPONENT EGRESS INTO THE BUILDING AND EGRESS INTO THE AHU CASING.

③ PROVIDE FAN WITH BELT TUNNEL AND GUARD, INLET PIEZOMETRIC RING, DRAIN, ALUMINUM WHEEL AND SPRING ISOLATORS FOR CEILING MOUNTING. FAN IS APPROX. 1300 LBS.

LEGEND

- PRESSURE REDUCING VALVE W/ DIRECTION OF REDUCTION
- STRAINER
- CHECK VALVE
- PNEUMATIC CONTROL VALVE
- OR — PRESSURE RELIEF VALVE
- AUTO FLOW VALVE
- BALL VALVE
- GATE VALVE
- BUTTERFLY VALVE
- GLOBE VALVE
- FS — FLOW MEASURING STATION
- THERMOMETER
- PRESSURE GAUGE
- AUTOMATIC AIR VENT
- PRESSURE SENSOR
- PT TEST PLUG
- WATER CIRCULATING PUMP
- AIR FLOW DIRECTION
- EXISTING TO REMAIN
- EXISTING TO BE REMOVED
- FIRE DAMPER IN DUCT AT WALL
- AFMS — AIR FLOW MEASURING STATION
- PNEUMATIC DAMPER ACTUATOR
- SD — PHOTOELECTRIC SMOKE DETECTOR BY DIV. 26 (INSTALLED BY DIV. 23)
- CONNECT NEW WORK TO EXISTING
- T — THERMOSTAT

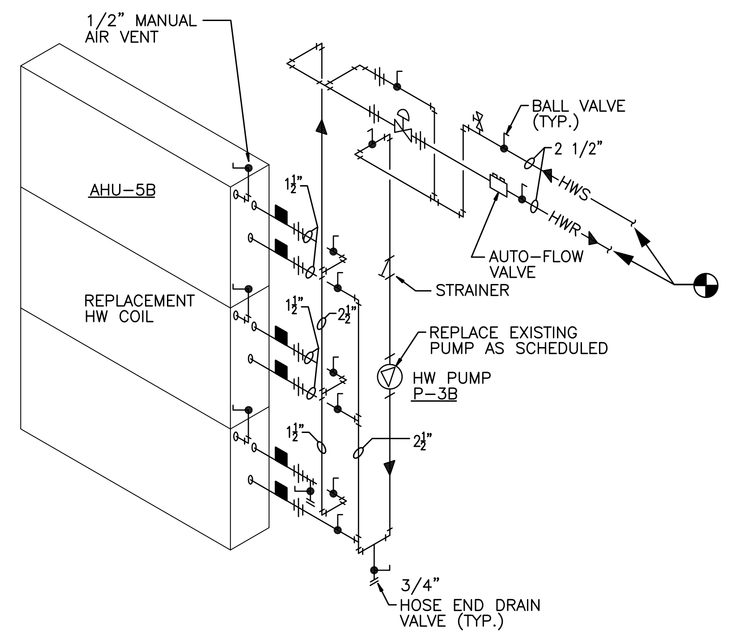

HOT WATER COIL PIPING AT AHU-5B

NO SCALE

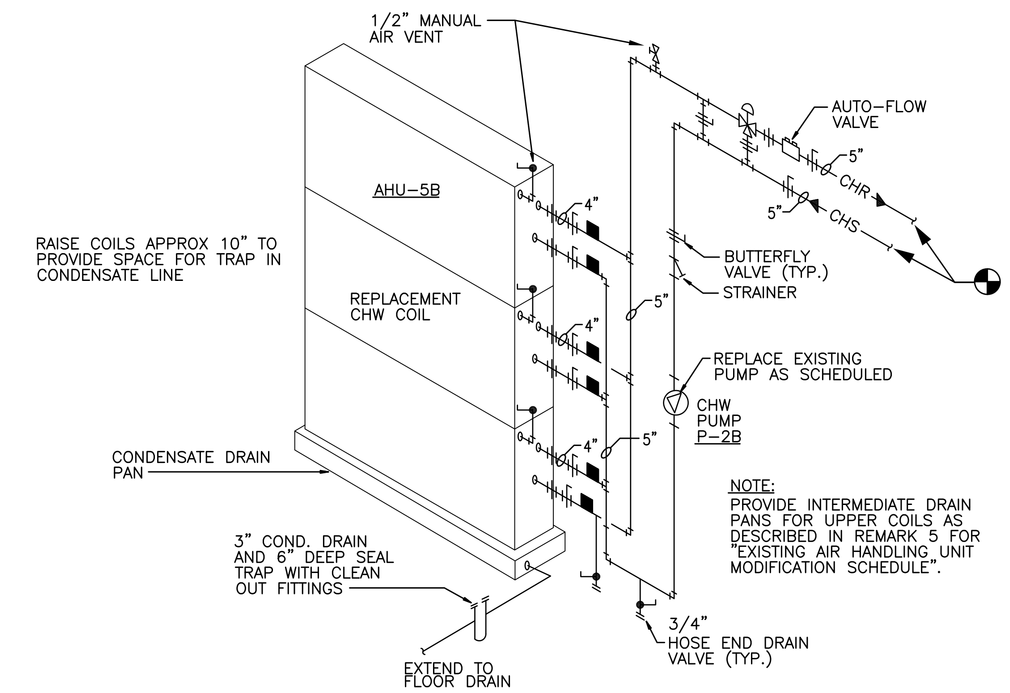

CHILLED WATER COIL PIPING AT AHU-5B

NO SCALE

GENERAL NOTES

1. PIPING SHALL BE MODIFIED IN A MANNER SO THAT THE EXISTING CHILLED WATER AND HEATING WATER SYSTEMS SERVING OTHER AIR HANDLING EQUIPMENT ARE NOT DRAINED BY PROVIDING A PLUG-FORMING TYPE SYSTEM SUCH AS A CRYOLATOR FREEZE KIT, LIQUID NITROGEN, AND MONITOR, OR CRYOLATOR'S ASSOCIATED ON-SITE FREEZING SERVICES; USING RIGID TOOL HOT TAP TOOLS; OR EQUAL "PLUG" FORMING TYPE SYSTEMS.

PUMP SCHEDULE

MARK	SERVICE	TYPE-MOUNTING	GPM (EA)	HEAD FT.	MIN. EFF.	MOTOR			EQUAL TO
						H.P.	V/PH/HZ	RPM	
P-2B	AHU-5B COOLING COIL	INLINE	340	15	59%	3.0	460/3/60	1750	BELL & GOSSETT SERIES 80-5x5x7
P-3B	AHU-5B HEATING COIL	INLINE	50	15	56%	0.5	460/3/60	1750	BELL & GOSSETT SERIES 60-1-1/2x5-1/4
P-5B	AHU-7B COOLING COIL	INLINE	180	15	55%	1.5	460/3/60	1750	BELL & GOSSETT SERIES 80-3x3x7B

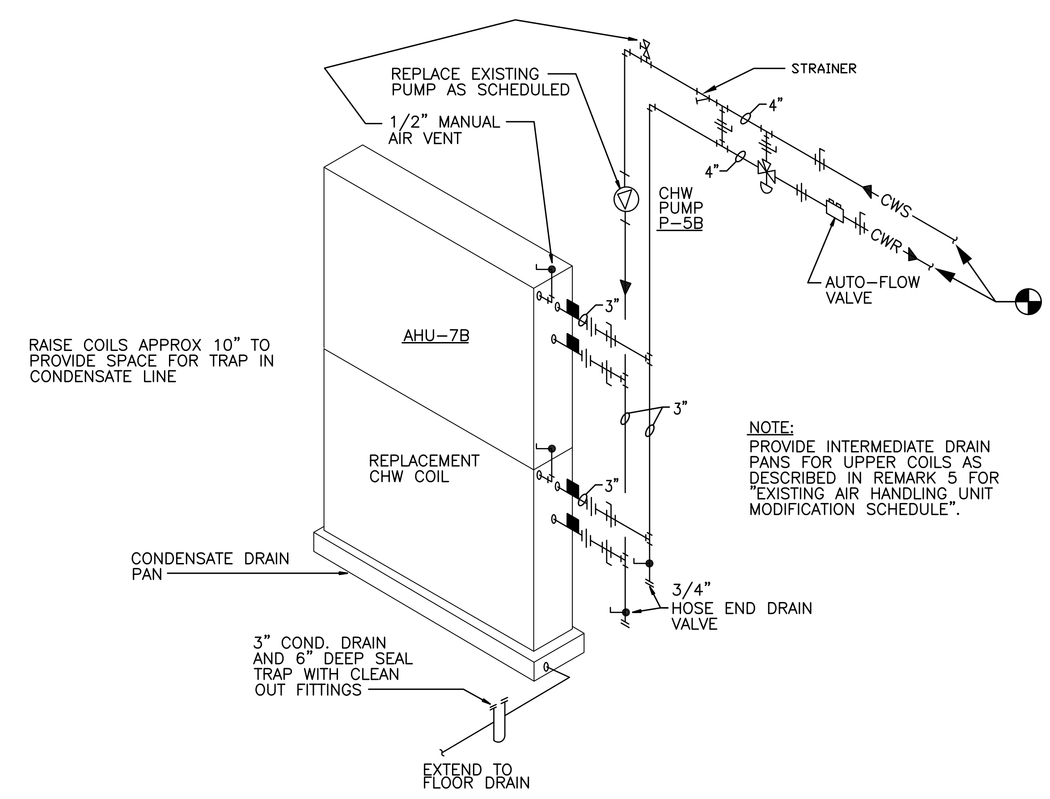

CHILLED WATER COIL PIPING AT AHU-7B

NO SCALE

REVISIONS:

PROJECT #: 24308.00
DATE: MARCH 3, 2014
DRAWN BY: MG
DESIGNER: JRF
CHECKED BY: MRB

Pickering
Pickering Firm, Inc.
Facility Design • Civil Engineering • Surveying •
Transportation • Natural Water Resources
6775 Lenox Center Court, Suite 300
Memphis, TN 38115
901.726.0810

OGCB Incorporated
3485 Poplar Avenue, Suite 200
Memphis, TN 38111/901-452-6383
Mechanical/Electrical Consulting Engineers

SBI-000242A
HVAC RETROFIT PHASE I
SHELBY COUNTY CRIMINAL JUSTICE CENTER
201 POPLAR AVENUE
MEMPHIS, TENNESSEE 38103

SEAL:

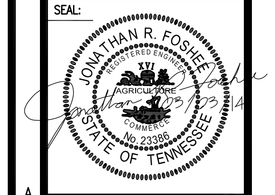

SHEET NUMBER:

M-601

DESCRIPTION:

MECHANICAL SCHEDULES AND DETAILS